PIONEER®
The Art of Entertainment

Service Manual

● KEH-P4200/UC

ORDER NO.
CRT1629

MULTI-CD CONTROL FM/AM TUNER DECK AMPLIFIER

KEH-P4200 UC
KEH-P4250 ES

MULTI-CD CONTROL FM/MW/LW TUNER DECK AMPLIFIER

KEH-P4110 EE
KEH-P20 EW
KEH-P10 EW

NOTE:

- **See the separate manual CX-197 (CRT1328) for the cassette mechanism description.**
- **The cassette mechanism employed in this model is one of 1M mechanism series.**

CONTENTS

CHAPTER 1
1. SPECIFICATIONS 1-2
2. OPERATION AND CONNECTION.....1-3
3. DISASSEMBLY 1-12
4. ADJUSTMENT 1-13
5. ERROR NUMBERS AND NEW TEST MODE 1-17
6. ELECTRICAL PARTS LIST 1-23

CHAPTER 2
1. PACKING METHOD.....2-2
2. CIRCUIT DIAGRAM AND PATTERN
2.1 TUNER AMP UNIT(KEH-P4200/UC,P4250/ES)...2-5
2.2 TUNER AMP UNIT(KEH-P4110/EE) 2-10
2.3 TUNER AMP UNIT(KEH-P20/EW,P10/EW) 2-15
2.4 CASSETTE MECHANISM ASSY 2-20
2.5 FM/AM TUNER UNIT (KEH-P4200/UC,P4250/ES) 2-21
2.6 TUNER UNIT(KEH-P4110/EE).....2-25
2.7 FM/AM TUNER UNIT(KEH-P20/EW,P10/EW)...2-29
2.8 KEY BOARD UNIT 2-33
3. CHASSIS EXPLODED VIEW 2-37
4. CASSETTE MECHANISM ASSY EXPLODED VIEW 2-40
5. BLOCK DIAGRAM 2-44

PIONEER ELECTRONIC CORPORATION 4-1, Meguro 1-Chome, Meguro-ku, Tokyo 153, Japan
PIONEER ELECTRONICS SERVICE INC. P.O.Box 1760, Long Beach, California 90801 U.S.A.
PIONEER ELECTRONICS OF CANADA, INC. 300 Allstate Parkway Markham,Ontario L3R OP2 Canada
PIONEER ELECTRONIC [EUROPE] N.V. Haven 1087 Keetberglaan 1, 9120 Melsele,Belgium
PIONEER ELECTRONICS AUSTRALIA PTY.LTD. 178-184 Boundary Road, Braeside, Victoria 3195, Australia TEL:[03]580-9911

© PIONEER ELECTRONIC CORPORATION 1994

K-FFD. NOV. 1994 Printed in Japan

CHAPTER 1

SAFETY INFORMATION (UC MODEL)

CAUTION

This service manual is intended for qualified service technicians; it is not meant for the casual do-it-yourselfer. Qualified technicians have the necessary test equipment and tools, and have been trained to properly and safely repair complex products such as those covered by this manual.
Improperly performed repairs can adversely affect the safety and reliability of the product and may void the warranty. If you are not qualified to perform the repair of this product properly and safely; you should not risk trying to do so and refer the repair to a qualified service technician.

WARNING

Lead in solder used in this product is listed by the California Health and Welfare agency as a known reproductive toxicant which may cause birth defects or other reproductive harm (California Health & Safety Code, Section 25249.5). When servicing or handling circuit boards and other components which contain lead in solder, avoid unprotected skin contact with the solder. Also, when soldering do not inhale any smoke or fumes produced.

1. SPECIFICATIONS

General
Power source ..... 14.4 V DC (10.8 — 15.6 V allowable)
Grounding system ..... Negative type
Max. current consumption ..... 8.5 A
Dimensions
(DIN) (mounting size) ..... 178 (W) × 50 (H) × 150 (D) mm
[7 (W) × 2 (H) × 5-7/8 (D) in.]
(nose) ..... 188 (W) × 58 (H) × 19 (D) mm
[7-3/8 (W) × 2-1/4 (H) × 3/4 (D) in.]
(D) (mounting size) ..... 178 (W) × 50 (H) × 155 (D) mm
[7 (W) × 2 (H) × 6-1/8 (D) in.]
(nose) ..... 170 (W) × 48 (H) × 14 (D) mm
[6-3/4 (W) × 1-7/8 (H) × 1/2 (D) in.]
Weight ..... 1.3 kg (2.9 lbs)

Amplifier
Continuous power output is 15 W per channel min. into 4 ohms, both channels driven 50 to 15,000 Hz with no more than 5 % THD.
Maximum power output ..... 35 W × 4 (EIAJ)
Load impedance ..... 4 Ω (4 — 8 Ω allowable)
Preout output level/output impedance
..... 500 mV/1 kΩ
Tone controls (bass) ..... ±10 dB (100 Hz)
(treble) ..... ±10 dB (10 kHz)
Loudness contour ..... +10 dB (100 Hz), +7 dB (10 kHz)
(Volume: –30 dB)

Tape player
Tape ..... Compact cassette tape (C-30 — C-90)
Tape speed ..... 4.46 cm/sec. (+0.14.cm/sec.,-0.05cm/sec.)
Fast forward/rewind time ..... Approx. 100 sec. for C-60
Wow & flutter ..... 0.13 % (WRMS)
Frequency response ..... 40 – 14,000 Hz (±3 dB)
Stereo separation ..... 45 dB
Signal-noise ratio ..... 52 dB (IHF-A network)

FM tuner
Frequency range(UC) ..... 87.9 — 107.9 MHz
Frequency range(EW,ES) ..... 87.5 — 108 MHz
Frequency range(EE) ..... 65 — 74 MHz
..... 87.5 — 108 MHz
Usable sensitivity ..... 11 dBf (1.0 μV/75 Ω, mono, S/N: 30 dB)
50 dB quieting sensitivity ..... 16 dBf (1.7 μV/75 Ω, mono)
Signal-to-noise ratio ..... 70 dB (IHF-A network)
Distortion ..... 0.3 % (at 65 dBf, 1 kHz, stereo)
Frequency response ..... 30 — 15,000 Hz (±3 dB)
Stereo separation ..... 40 dB (at 65 dBf, 1 kHz)
Selectivity ..... 70 dB (2ACA) (±400 kHz)
Three-signal intermodulation (desire signal level)
..... 50 dBf (two undersire signal level: 110 dBf)

AM tuner
Frequency range(UC,ES) ..... 530 — 1,710 kHz
Frequency range(EW,EE,ES) ..... 531 — 1,602 kHz
Usable sensitivity ..... 18 μV (25 dB) (S/N: 20 dB)
Selectivity ..... 50 dB (±10 kHz)

These specifications were determined and are presented in accordance with specification standards established by the Ad Hoc Committee of Car Stereo Manufacturers.

Note:
Specifications and design are subject to possible modification without notice due to improvements.

2. OPERATION AND CONNECTION

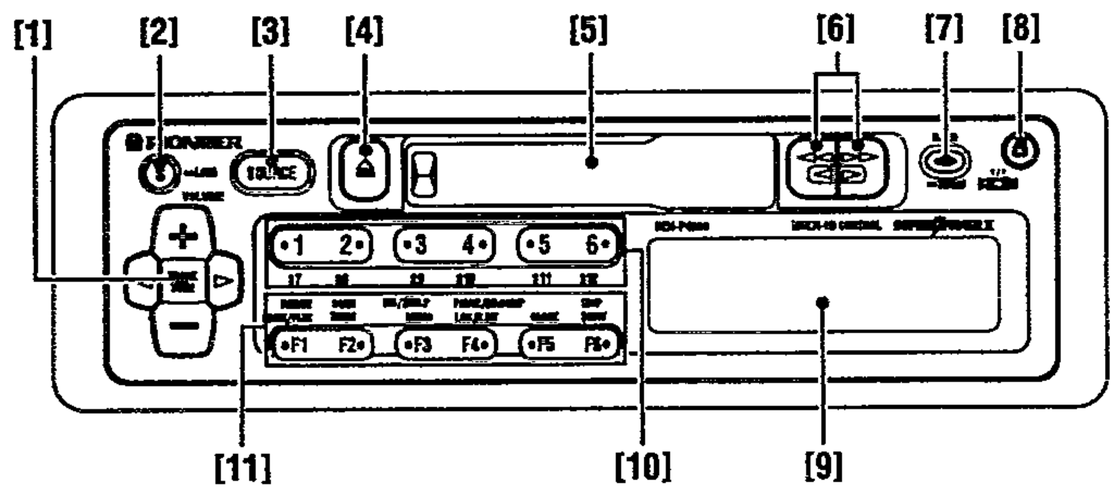

Fig. 1

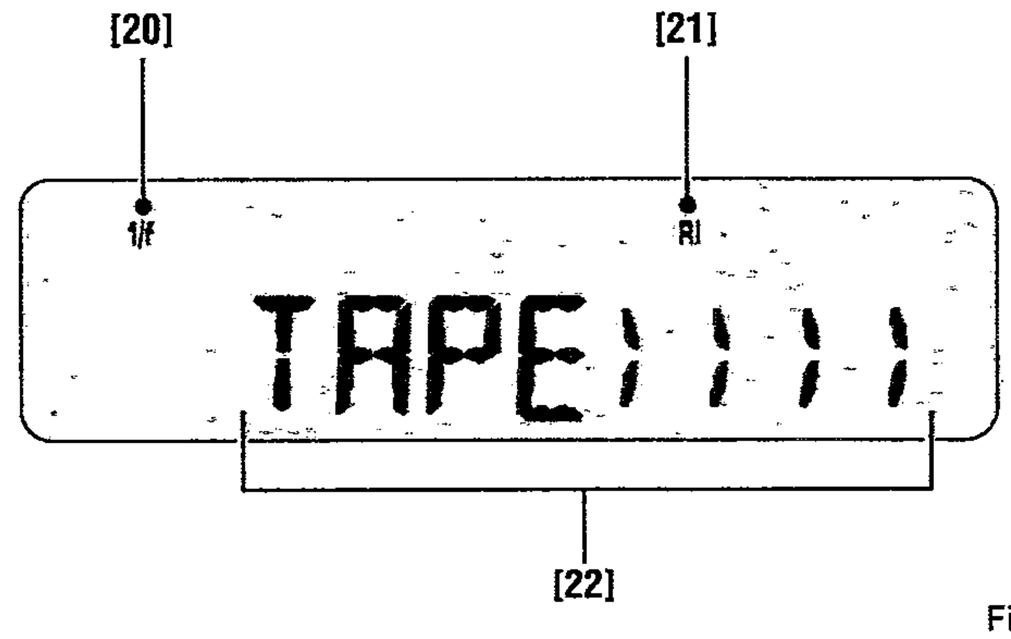

Fig. 3

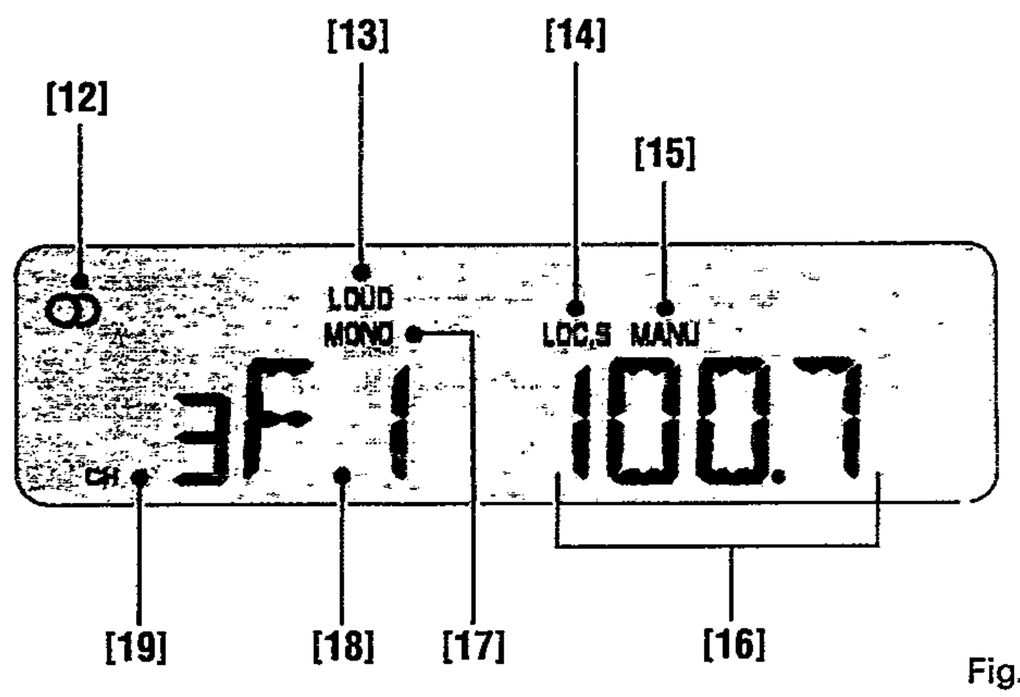

Fig. 2

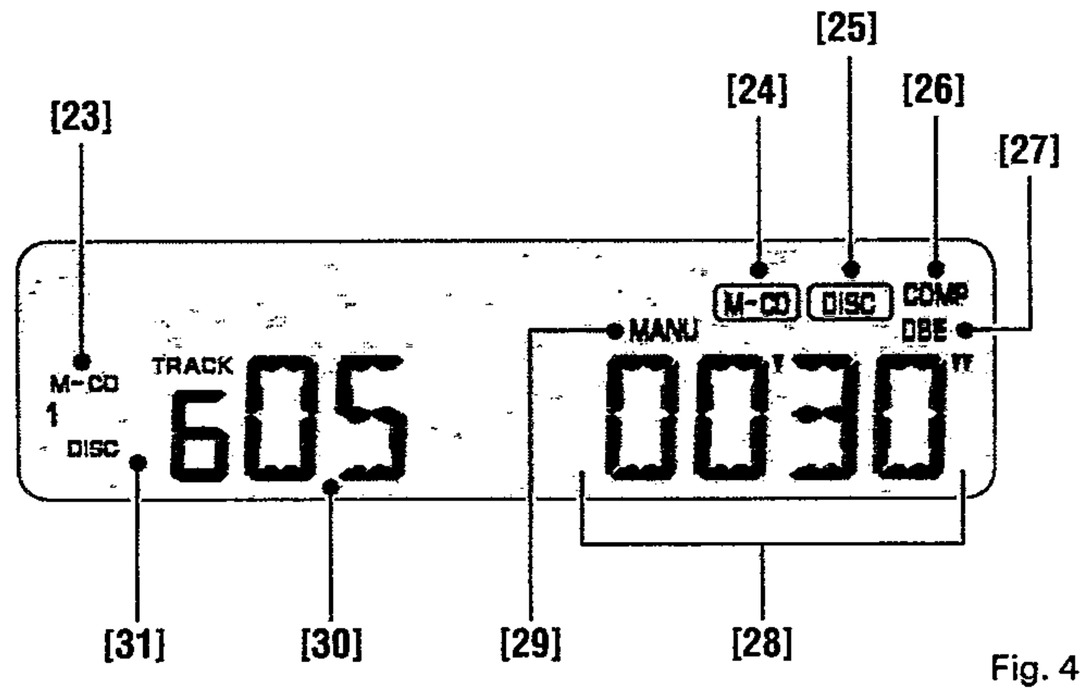

Fig. 4

Connecting the Units

Note:

- *This unit is for vehicles with a 12-volt battery and negative grounding. Before installing it in a recreational vehicle, truck, or bus, check the battery voltage.*
- *To avoid shorts in the electrical system, be sure to disconnect the battery ⊖ cable before beginning installation.*
- *Check whether installation and wiring have been completed correctly. Replace the removed car components, then connect the end of the cable to the negative ⊖ terminal of the battery.*
- *Refer to the owner's manual for details on connecting the various cords of the power amp and other units, then make connections correctly.*
- *Secure the wiring with cable clamps or adhesive tape. To protect the wiring, wrap adhesive tape around them where they lie against metal parts.*
- *Route and secure all wiring so it cannot touch any moving parts, such as the gear shift, handbrake, and seat rails. Do not route wiring in places that get hot, such as near the heater outlet. If the insulation of the wiring melts or gets torn, there is a danger of the wiring short-circuiting to the vehicle body.*
- *Don't pass the orange lead through a hole into the engine compartment to connect to the battery. This will damage the lead insulation and can cause a very dangerous short.*
- *Do not shorten any leads. If you do, the protection circuit may fail to work when it should.*
- *Never feed power to other equipment by cutting the insulation of the power supply lead of the unit and tapping into the lead. The current capacity of the lead will be exceeded, causing over heating.*
- *When replacing fuse, be sure to use only fuse of the rating prescribed on the fuse holder.*
- *Since a unique BPTL circuit is employed, never wire so the speaker leads are directly grounded or the left and right speaker ⊖ leads are common.*
- *Speakers connected to this unit must be high-power types possessing minimum rating of 35 W and impedance of 4 to 8 ohms. Connecting speakers with output and/or impedance values other than those noted here can damage the speakers.*
- *When connecting a power amp, never connect the blue lead to the amp's power supply terminal. Also, when connecting an auto antenna, never connect the blue lead to the antenna's power supply terminal. Such connections may cause damage due to excessive current.*
- *To prevent incorrect connection, the input side of the IP-BUS connector is blue, and the output side is black. Connect the connectors of the same colors correctly.*
- *When the unit is mounted in a vehicle whose ignition switch does not have the ACC (accessory) position as shown in Fig. 6, be sure to connect the red lead of the unit to the terminal controlled by the ignition switch ON/OFF position. If you do not, the vehicle battery may go flat when you leave your vehicle for several hours.*

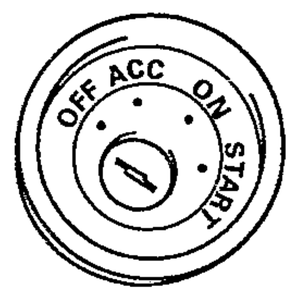

ACC position

Fig. 5

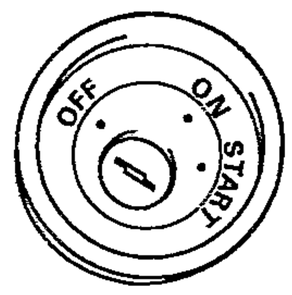

No ACC position

Fig. 6

Connection Diagram (Fig. 7)

1. Antenna jack
2. Rear out
3. White
4. Red
5. Connecting cords with RCA pin plugs (sold separetely)
6. Power amp (sold separetely)
7. Blue
8. CD player (sold separately)
9. Multi-play CD player (sold separetely)
10. Please make correct connections according to the directions in the Multi-play CD player's owner's manual.
11. IP-BUS input (blue)
12. Blue
    To system control terminal of the power amp or Auto-antenna relay control terminal (Max. 300 mA 12 V DC).
13. Black (ground)
    To vehicle (metal) body.
14. Red
    To electric terminal controlled by ignition switch (12 V DC) ON/OFF.
15. Orange
    To terminal always supplied with power regardless of ignition switch position
16. Fuse resister
17. Fuse holder
18. With a 2 speaker system, connect to the 2 speakers in the front or the rear.
19. Use this for connections when you have the separately available amplifier.
20. Front/left speaker
21. Front/right speaker
22. Rear/left speaker
23. Rear/right speaker
24. Green
25. Gray
26. Green/black
27. Gray/black
28. Green/red
29. Gray/red
30. Black/green
31. Black/gray

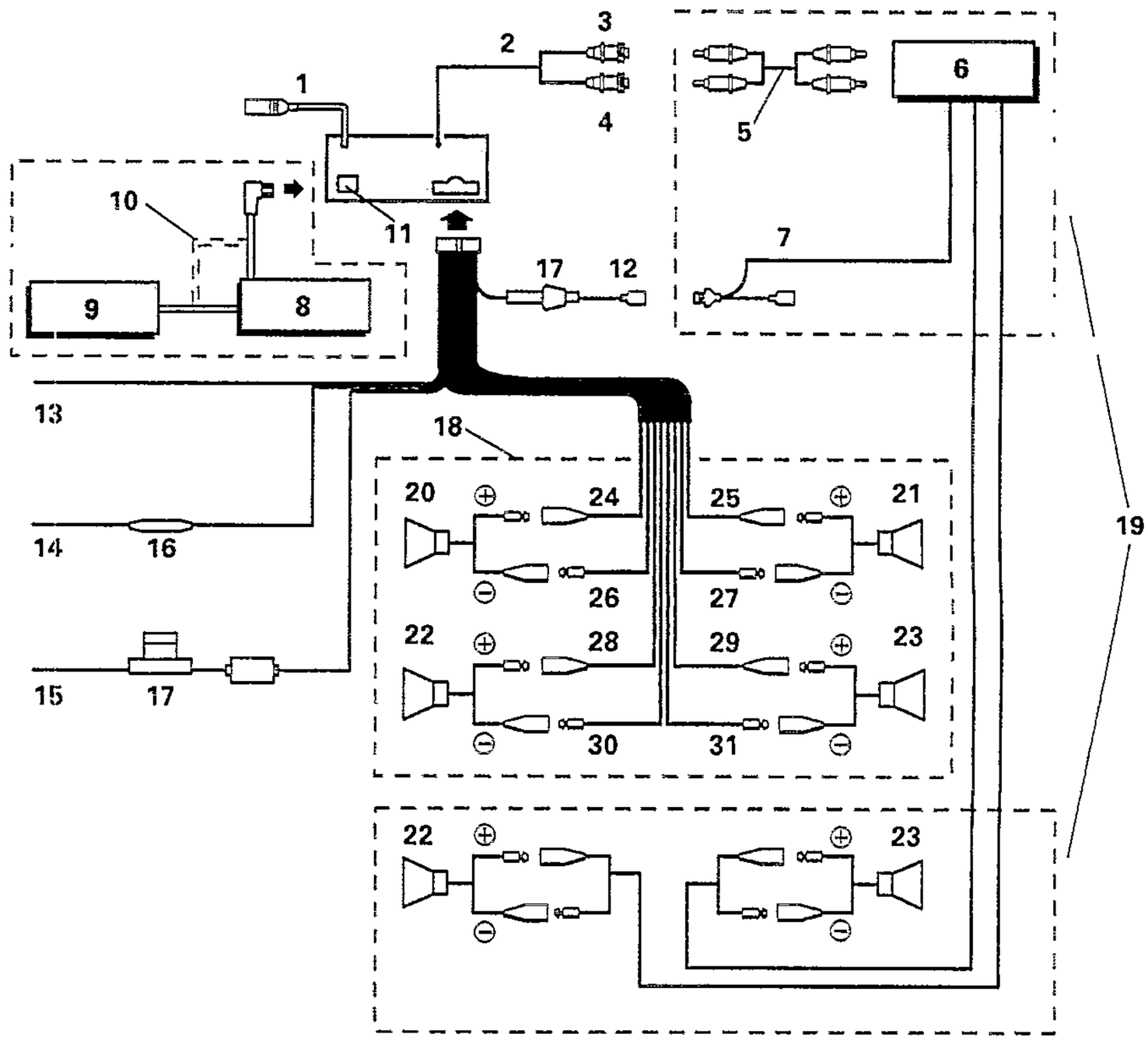

Fig. 7

Using the Clear Button

- The clear button can be located on the unit after you have removed the front panel. (Fig. 8)
  Refer to the previous page to find out how to remove the front panel.

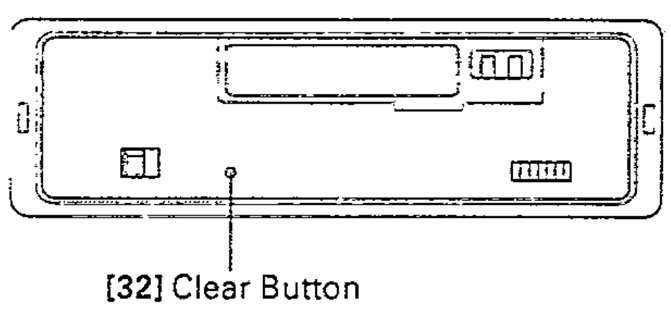

Fig. 8

Once all wiring is complete, press button [32] with a thin, pointed object. Though not a normal occurrence, the microprocessor which controls the operation of this unit can be affected by electrostatic noise. This generally is indicated by such symptoms as no power being supplied when you switch the unit on, failure of buttons and controls, or an abnormal display. Should this happen, press button [32] with a thin, pointed object to reset the microprocessor.

Switching Power ON

Parts Identification

Fig. 1

[3] Source selector
[5] Cassette door
[9] Display
[11] Function buttons
  F1: AUX ON/OFF
  F2: Multi-play CD player display ON/OFF

Changing the source

Each time you press button [3], the source changes as follows.
Tape → Radio → Multi-play CD player → CD player → AUX → OFF

Tape

- When there is no cassette tape loaded in this unit, the source does not switch to Tape.
- The source switches to TAPE when a cassette is inserted into [5] on this unit.

Multi-play CD player

- Even if this unit is not combined with a multi-CD player, the multi-CD player indicator appears when the source button is switched ("M-CD" appears on display [9]).
  To turn this indicator off when the multi-CD player is not connected, hold down button F2 in Bank [11] and turn the ignition switch from the OFF position to the ON position.
  When this operation is performed again, "M-CD" appears on the display.

CD player
- When not using this unit with a CD player, or when a CD is not loaded in the CD player, the source does not switch to CD player.
- When there is a disc loaded in the CD player, the source switches to CD player.

AUX
- When no other components are connected to this unit, or when the AUX (external input) is set to OFF, the source does not change. Switch the AUX (external input) to ON. Hold down button F1 in Bank [11] and set the ignition switch from OFF to ON.

Adjusting Volume and Tone

Parts Identification

Fig. 1
[1] Volume/Audio adjustment
[2] Shift
[9] Display

Fig. 2
[13] Loudness

Mode Selection

Each press of button [2] changes the mode as follows:
Volume adjustment (VOL) → Balance adjustment (FAD/BAL) → Tone adjustment (BAS/TRE) → F.I.E. mode.
- When you are adjusting fader, balance, bass or treble settings, the indicator will stop at the center setting briefly.
- If no operations are performed within 8 seconds, adjustment modes are canceled. Make adjustments within 8 seconds.

Volume Adjustment
Pressing the (+) side of button [1] increases the volume, while the (–) side decreases it.
(Display shows "VOL 00" ~ "VOL 30".)
- *When driving your vehicle, be sure to keep the volume of the unit set low enough to allow you to hear sounds coming from outside.*

Balance Adjustment
Press button [2] to select balance adjustment mode. ("FAD" appears on the display.) Adjust the fader using the (+) or (–) side of button [1]. To adjust the balance, press either the (◄) or (►) side of button [1] to turn on "BAL" and use the (◄) or (►) side of the button.

Fader
When you press the (+) side of button [1], the front speaker volume increases gradually while the rear speaker volume decreases. When you press the (–) side of the button, the rear speaker volume increases gradually while the front speaker volume decreases.
(Display shows "FAD F15" ~ "FAD R15".)
- Please set "FAD 0" when using 2 speaker system.

Balance
Pressing the (◄) side of button [1] shifts the balance to the left speaker, while the (►) side shifts it to the right speaker.
(Display shows "BAL L9" ~ "BAL R9".)

Tone Adjustment
Press button [2] to select tone adjustment mode. ("BAS" appears.) Select the tone you wish to adjust using the (◄) or (►) side of button [1]. Pressing the (►) side boosts the TRE: pressing the (◄) side boosts the BAS.

Bass Adjustment
Select the Bass mode.
Pressing the (+) side of button [1] increases bass, while the (–) side decreases bass.
(Display shows "BAS –6" ~ "BAS +6".)

Treble Adjustment
Select Treble adjustment mode.
Pressing the (+) side of button [1] increases treble, while the (–) side decreases treble.
(Display shows "TRE –6" ~ "TRE +6".)

Switching the F.I.E. function
Pressing the (►) side of button [1] turns the F.I.E. (Front Image Enhancer) function on. Pressing the (◄) side of button [1] turns it off.

Using the F.I.E. function

The F.I.E. (Front Image Enhancer) function cuts middle and high range frequency output from the rear speakers so that only low-range frequencies are output, for a simple way to enhance front imaging.
1. Press button [2] to switch to the F.I.E. mode .
2. Press the (►) side of button [1] to switch the F.I.E. mode ON.
3. Switch to the Fader mode, and balance front volume and rear bass volume .
4. Adjust volume and tone.

> ***Note:***
> - *If you turn off the F.I.E. function, the rear speakers will output all sounds in addition to the bass sounds. This will cause a sudden increase in volume. Therefore, be sure to reduce the volume before turning off the F.I.E. function.*

Loudness

This "loudness" function enhances both the high and low ranges of sound to give even more power to output even at low volume.
Hold down the button [2] for more than 2 seconds, the loudness function turns on.
(The "LOUD" [13] indicator appears on the display [9].)
Hold down the button [2] again for more than 2 seconds, the loudness function turns off.

Using the Radio

Parts Identification

Fig. 1
[1] Tuning
[3] Source selector
[7] Band/Manual
[9] Display
[10] Preset
[11] Function buttons
F1: Best stations memory (BSM)
F3: FM stereo, mono
F4: Local station

Fig. 2
[12] FM stereo
[14] Local station
[15] Manual
[16] Frequency
[17] FM mono
[18] Band
[19] Preset number

Listening to the Radio

- **Electronic Tuner**

Frequency allocation differs depending upon the area. This unit has been designed in accordance with the frequency allocations for North America. Use in other areas will result in improper reception.
1. **Press button [3] to switch the radio power on.**
2. **Press button [7] to select a band.**

F 1 → F2 → F3 → AM
(FM1) (FM2) (FM3) (AM)

3. **Use seek tuning to tune in a frequency.**
Press the (►) side of button [1] to automatically tune in the next higher receivable frequency, and the (◄) side for a lower frequency.
4. **Adjust volume and tone .**
5. **Assign the tuned frequency to one of the buttons in Bank [10] (preset memory).**
Press and hold down one of the buttons in Bank [10] for at least 2 seconds. The frequency is assigned to the selected button when the preset number [19] stops flashing on the display. Up to 18 FM stations (6 FM1 stations, 6 FM2 stations and 6 FM3 stations), and 6 AM stations can be assigned to the preset memory.
6. **Once a frequency is assigned to a button in Bank [10], you just need to press that button to tune it in.**
This also causes the number of the button pressed to appear at position [19] on the display.

Adjusting Seek Sensitivity

The seek tuning function of this tuner lets you select between a local setting for reception of strong stations only, and a DX (distant) setting for reception of weaker stations.

Switching between Local and DX

Press button F4 of Bank [11] to switch between Local and DX (distant) seek tuning. When "LOC.S" [14] is shown on the display, seek tuning is performed with the local seek sensitivity. Otherwise, seek tuning is performed with the DX seek sensitivity.

Manual Tuning

Use manual tuning when stations are too weak to be picked up by seek tuning.

1. Hold down button [7] for more than 2 seconds, and "MANU" indication [15] lights.
2. Each press of the (►) side of button [1] increases the frequency in 0.2 MHz steps in the FM band, 10 kHz in the AM band. Pressing the (◄) side of button [1] decreases the frequency. Holding down either side of button [1] changes the frequency at high speed.

Switching between FM Stereo and Mono

Generally, it is best to allow the "Super Tuner III" function to automatically set the optimum listening conditions. When stereo broadcasting is received, " ⦶ " [12] will appear on the display. When there is a large amount of noise, you can press button F3 of Bank [11] for clearer mono reception ("MONO" [17] will appear on the display).

BSM (Best Stations Memory)

This function automatically locates stronger stations and automatically assigns their frequencies to the buttons in Bank [10], from strongest to weakest. It comes in handy when trying to find local stations while driving.

1. Press button [7] and select a band.
2. Holding down button F1 of Bank [11] for about 2 seconds will start BSM search. At this time, "BSM" will flash on the display.
3. The frequency display will return once BSM search is complete, and frequencies are assigned to preset buttons.

- You can cancel BSM search by pressing button F1 of Bank [11] again.
- *If there are fewer than 6 strong stations in the area, some of the preset buttons will not be assigned frequencies, so they will retain any frequencies assigned to them previously.*
- *BSM search may take as long as 30 seconds in areas where there are few strong stations.*

Using the Tape Deck

Parts Identification

Fig. 1
[3] Source selector
[4] Eject
[5] Cassette door
[6] Fast forward, Rewind/Direction change
[9] Display
[11] Function buttons
F1: FLEX (Frequency Level Expander)
F4: Radio intercept

Fig. 3
[20] FLEX
[21] Radio intercept
[22] Tape play

About Cassette Tapes

- *Do not use tapes longer than C-90-type (90 min.) cassettes. Longer tapes can interfere with tape transport.*
- *A loose or warped label on a cassette tape may interfere with the eject mechanism of the unit or cause the cassette to become jammed in the unit. Avoid using such tapes or remove such labels from the cassette before attempting use.*
- *Storing cassettes in areas directly exposed to sunlight or high temperatures can distort them and subsequently interfere with tape transport. (Fig. 9)*

Fig. 9

- *Store unused tapes in a tape case where there is no danger of them becoming loose or being exposed to dust.*

Cleaning the Head

- *If the head becomes dirty, the sound quality will deteriorate and there will be sound dropouts and other imperfections in performance. In this case, the head must be cleaned.*
- *When using a cleaning tape, play it once on one side for normal cleaning. Excessive use of the cleaning tape will increase head wear. Be sure to read the cleaning tape instructions before use.*

Listening to a Tape

1. **By inserting the cassette tape into slot [5], power will be turned on and the tape will begin to play.**

At this time, the tape running, tape play indicator [22] will light up to your satisfaction.

2. **Adjust volume and tone .**
3. **To stop tape playback, press button [3] to switch the source OFF, or press button [4] to eject the cassette tape.**

- *Do not try to eject the cassette immediately after insertion, as it may result in malfunction. Wait a few seconds.*
- *Be sure to eject the tape when the front panel is removed, or the vehicle's ignition is turned OFF. Leaving the tape in the unit can deform the pinch roller causing wow and flutter during tape playback.*
- *Loose tapes should be rewound with the aid of a pencil and unevenly wound tapes rewound with the use of the fast forward function.*

Changing Program

Push the fast forward and rewind buttons [6] together to switch from one side of the tape to the other (from Side A to Side B or vice versa).

Using Fast Forward and Rewind

Since the transport can be in either direction, both the left and right high-speed tape transport buttons [6] can be regarded as fast forward/rewind buttons.
For fast forward, press the high-speed tape transport button [6] that corresponds to the direction that is shown by the tape play indicator [22]. When the end of the tape is reached, playback will automatically begin from the opposite side of the tape (Auto-reverse).
For rewind, press the button [6] that is opposite that of the direction shown by the tape play indicator [22]. When the end of the tape is reached, playback will automatically begin from the beginning of the same side of the tape (Auto-replay).
When you release fast forward/rewind, lightly press button [6] located on the opposite side of the one you pressed to fast forward or rewind.

- "<-- -->" [22] will flash when the tape is fast forwarding or rewinding.

FLEX (Frequency Level Expander)

If the high-frequency performance is poor when playing back an old or poorly recorded cassette, you can improve it by pressing button F1 in bank [11]. ("I / f" [20] appears.)

- *This function may have little effect on a cassette offering good sound quality, for instance, one recorded from compact disc.*

Radio Intercept

During fast forward/rewind of a tape, it is possible to listen to the radio.
Press button F4 in bank [11].
("RI" [21] appears.) At this time, if you fast forward or rewind the tape, the unit automatically switches to radio sound.

- While the radio intercept is in operation, the display indicates radio.

Playing Compact Discs

Precautions When Using the Multi-Play CD Control

- This unit can control multi-play CD players when it is used with multi-play CD player (CDX-P1210, CDX-P610).
- If the IP-BUS extension adapter is used, up to 4 multi-play CD players can be connected to the unit. When two or more CD players are connected, their priorities must be specified for the Multi-play CD players. See the Multi-play CD players instructions and set the address switches correctly.
- The Owner's Manual for the multi-play CD player does not contain an explanation of the CD controls for this unit. Read this Owner's Manual for details on proper operation and keep it handy for later reference.

Parts Identification

Fig. 1

[1] Track number search/Fast forward, Reverse
[3] Source selector
[7] Multi-play CD player select/Manual
[9] Display
[10] Disc number search
[11] Function buttons
- F1: Play mode switching/Program erase
- F2: Scan play/Random play
- F3: ITS (Instant Track Selection)/ ITS play
- F4: Pause/Digital Compression
- F6: Display switching/Disc title

Fig. 4

[23] Multi-play CD player number display
[24] Magazine repeat mode display
[25] Disc repeat mode display
[26] COMP
[27] DBE
[28] Play elapse time display
[29] Manual
[30] Track number
[31] Disc number

Using the Multi-Play CD Player

1. Press button [3] to change the display to the multi-play CD player mode and to begin disc play.

2. Use the Disc Number Search function to select a disc.

Select the desired disc by pressing one of the Disc number search buttons. The number of the disc selected appears at position [31] on the display.

- When connected to the 12-disc changer, to select discs 7 – 12, press buttons 1 – 6 and hold for at least 2 seconds.
  Example:
  To select disc 7, press button 1 in Bank [10] and hold for 2 seconds more.
- If the number at position [31] on the display does not change when you press a Disc number search buttons, it means that there is no disc loaded in that tray.

3. Adjust volume and tone.

4. To stop disc play, press button [3].

At another press, the normal play resumes from about where it stopped.

Note:

- When you turn the power on or change the disc to be played, the multi-play CD player may perform a preparatory operation (verifying there is a disc, reading disc information, etc.) "READY" is displayed during this time.
- When the multi-play CD player is not working correctly, an error message appears on the display (Ex.: "ERROR-80"). Identify the error from the multi-play CD player owner's manual.
- After you press a Disc number search button, it may take some time before play begins due to the time necessary to load and set the disc in the mechanism.

Multi-Play CD Player Switching

Up to 4 Multi-play CD players can be connected to this unit. When several multi-play CD players are connected, you can select the one you want to play.
Each press of button [7] selects multi-play CD player 1 to 4. The Multi-play CD player number appears on the display [23].

Track Number Search

The desired track on the disc currently being played can be selected by track (or song) number.
Confirm that Track Number is shown at Position [30] on the display. If not, press the button F6 of Bank [11].
Press the (►) side of button [1] to increase the number at Position [30], or the (◄) side to decrease the number. Holding either side of button [1] changes the track number at high speed.

Using Fast Forward and Reverse

1. Hold down button [7] for more than 2 seconds, and "MANU" indication [29] lights.
2. Press the (►) side of button [1] for fast forward, and the (◄) side for reverse.

- Sound is output during fast forward and reverse operations.

Repeat

You can select one of the play modes (repeat modes) listed below.

Play mode (repeat mode)	Operation
One-Track Repeat	Play the current track repeatedly. • When you perform track number search or fast forward or rewind, the mode changes to disc repeat mode. • Switching the multi-CD player being played or the disc switches to magazine repeat mode.
Disc Repeat	Play the same disc repeatedly. • Switching the multi-CD player being played or the disc switches to magazine repeat mode.
Magazine Repeat	Play all discs loaded in the magazine in the multi-play CD player repeatedly. All discs in the magazine are played repeatedly from the first disc.
ALL Repeat	The mode changes to this mode when 2 or more multi-play CD players are connected. Multi-play CD players 1 to 4 are played.

Each press of button F1 in bank [11] causes the mode to change as follows:
One-Track Repeat ("RPT" appears on the display [28]) → Disc Repeat ("DISC" [25] appears) → Magazine Repeat ("M-CD" [24] appears) → ALL Repeat

Random Play

The microcomputer of the multi-play CD player can play tracks on discs in a random order. Random play is performed according to the current play mode (repeat mode) as follows:

Play mode (repeat mode)	Tracks to be played at random
One-Track Repeat	All tracks on the disc being played. • The play mode changes to disc repeat mode.
Disc Repeat	All tracks on the disc being played.
Magazine Repeat	All tracks on the discs in the magazine being played.
ALL Repeat*	All tracks on all discs in multi-play CD players 1 to 4.

* When 2 or more multi-play CD players are connected.

1. Select the desired random play mode (repeat mode).
2. Hold down button F2 in Bank [11] for more than 2 seconds. ("RDM" appears on the display [28].) To cancel random play, hold down button F2 in Bank [11] for more than 2 seconds again. ("RDM" disappears.)

Using Scan

The first parts of each track are played in succession for about 10 seconds. This function is useful to search for the track or disc you want to listen to. Scan is performed according to the current play mode (repeat mode) as follows:

Play mode (repeat mode)	Tracks to be scanned and played
One-Track Repeat	All tracks on the disc being played. • The play mode changes to disc repeat mode.
Disc Repeat	All tracks on the disc being played.
Magazine Repeat	The first tracks of all the discs in the magazine being played.
ALL Repeat *	First tracks of all discs loaded in multi-play CD players 1 to 4.

* When 2 or more multi-play CD players are connected.

1. Select the desired scan play mode (repeat mode).
2. Press button F2 in Bank [11]. ("SCAN" appears on the display [28]). The first parts of all tracks are played in succession for about 10 seconds.
3. When you hear the track you want, press button F2 in Bank [11] again to cancel Scan. ("SCAN" disappears.) The track (disc) being played is then played to the end.

- The previous function automatically resumes when a piece of music with which Scan began returns.

ITS (Instant Track Selection)

This function lets you program and play the tracks you want. You can listen to just your favorite tracks.

- The ADPS function* of the multi-play CD player lets you program up to 100 discs. (Up to 100 discs can be programmed including disc title inputs.)
  * ADPS: Automatic Disc Program Selection
- Up to 99 tracks can be programmed for a single disc.
- When the number of discs exceeds 100, discs not being played (Information not being renewed) in memory is overwritten by the newest.
- Tracks are programmed for each disc. Programmed tracks are not erased after the disc is changed.

Programming

1. Play the track you want to program.
2. Press button F3 in Bank [11] to program the track.
   ("ITS" appears on the display [28] for 3 seconds.)

- Program tracks while ITS play is not in progress. It is possible during scan play or random play.

ITS Play

Track stored only in memory are played in order. Tracks are played according to ITS play mode (repeat mode) as follows:

Play mode (repeat mode)	Tracks to be played by ITS
One-Track Repeat	Programmed tracks on the disc being played. • The play mode changes to disc repeat mode.
Disc Repeat	Programmed tracks on the disc being played.
Magazine Repeat	Programmed tracks on the discs in the magazine being played. • If the disc being played contains no programmed tracks, the next disc containing programmed tracks is played.
ALL Repeat*	Programmed tracks on all discs in all magazines in multi-play CD players 1 to 4. • If the disc (multi-play CD) being played contains no programmed tracks, the next disc (multi-play CD) containing programmed tracks is played.

* When 2 or more multi-play CD players are connected.

1. Select the desired ITS play mode (repeat mode).
2. Hold down button F3 in Bank [11] for more than 2 seconds. ("ITS.P" appears on the display [28].) To cancel ITS play, hold down button F3 in Bank [11] for more than 2 seconds again. ("ITS.P" disappears.)

- *If you try to play a track that is not programmed within the play range of the selected repeat mode by ITS, "EMPTY" will appear on the display [28] for about 3 seconds, indicating that ITS play is not possible.*
- *You can perform scan play or random play during ITS play. In this case, scan play or random play applies to all the tracks stored in memory. (If the play mode is the magazine repeat mode or all repeat mode, scan play applies to all the tracks of the discs in the magazine stored in memory.)*
- *During ITS play, multi-play CD players containing discs with programmed tracks are switched, and disc and track number search is performed on programmed tracks. So, you cannot switch to any tracks or discs that are not stored in memory.*
- When you turn the power on or change the disc to be played, the multi-play CD player may perform a preparatory operation (verifying there is a disc, reading disc information, etc.). "READY" is displayed during this time.

Erasing the ITS Program

You can erase one or all selections of the program for the disc being played by ITS.

To erase a single selection:

1. Start ITS play.
2. Play the track you wish to erase by using disc number search or track number search.
3. Hold down button F1 in Bank [11] for more than 2 seconds. ("CLEAR" appears on the display [28] for about 3 seconds.)

To erase the disc program:

1. Start normal play.
2. Play the disc you wish to erase by using disc number search.
3. Hold down button F1 in Bank [11] for more than 2 seconds to erase the program. ("CLEAR" appears on the display [28] for about 3 seconds.)

Pausing

1. Press button F4 in Bank [11] to pause during disc playback ("PAUSE" appears on display [28]).
2. Press button F4 in Bank [11] again to release pause.

- You can select a track using the track number search during pause. ("PAUSE" is off while a track is being searched.) When the track search ends, the found track is paused at its beginning.

Disc Title Input

You can enter a title for the disc in the multi-play CD player. The title stored for the disc can be displayed.

- The ADPS function* of the multi-play CD player lets you enter titles for up to 100 discs. (Up to 100 discs, including ITS, can be programmed.)
  *ADPS: Automatic Disc Program Selection
- A disc title can consist of up to 8 characters for a single disc.
- When the number of discs exceeds 100, discs not being played (Information not being renewed) in memory is overwritten by the newest.
- One title is stored for each disc. The title stored for a disc is not erased after the disc is changed.

Entering Titles

1. Select the disc for which you want to enter a title.
2. Hold down button F6 in Bank [11] for more than 2 seconds to select title input mode.
3. Press the (◄) or (►) side of button [1] to select the input position. The input position moves continuously when you hold down either side of the button.

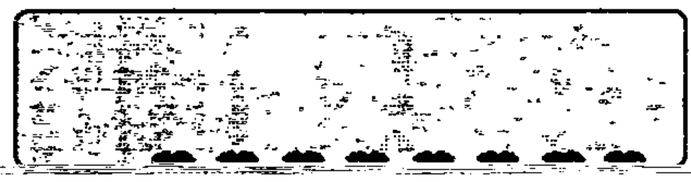

4. Select characters using the (+) or (–) side of button [1]. When you hold down either side of the button, the character changes continuously. Each press of the (+) side changes the character from "A → B → C...", while each press of the (–) side changes the character from "C → B → A". To enter a space, press the space sign (_).
5. Enter all characters by repeating steps 3 and 4.
   Press button F6 in Bank [11] to store them in memory.
   The title will appear on the display.

- To modify an input title, carry out steps 1 to 5 above again.

Display Switching

Each press of button F6 in Bank [11] switches the display [28] between the elapsed play time and disc title.
When you press button [7] while the disc title is being displayed, the normal operation display will appear for 8 seconds.

CD sound quality adjustment function

If you connect a Multi-play CD Player with COMP (Compression) and D.B.E. (Dynamic Bass Emphasis) functions to this unit, you can use these functions with this unit. (If you connect a Multi-play CD Player that does not feature these functions, even if you try to switch to these functions, "NO COMP" is displayed, indicating that switching is not possible.)

COMP (Compression) function

This function suppresses loud sounds while boosting quiet sounds to reduce the difference between the two.
Use this function if there is distortion when you raise the volume.
When the COMP function is ON, "COMP" [26] lights in the display.

D.B.E. (Dynamic Bass Emphasis) function

When listening in a car, bass sound may be insufficient. This function boosts bass.
When the D.B.E. function is ON, "DBE" [27] lights in the display.

COMP and D.B.E. switching

You can switch between two COMP and D.B.E. levels.
Level switching of both functions at the same time is not possible.

1. Press button F4 in Bank [11] for more than 2 seconds to select the switching mode.
2. Each time you press button F4 in Bank, the mode changes as follows.

COMP OFF → COMP 1 → COMP 2 →
COMP OFF → DBE 1 → DBE 2 → COMP OFF

- With both COMP and D.B.E., the second mode is more effective.

Using CD Player

Precautions when using the CD player
Control
- If you connect a CDS-P45 CD player, you can control it with this unit.
- CD player operation is explained in the CD player's instruction manual, but because this unit is controlling the CD player, refer to this unit's instruction manual for details concerning operation.

Parts Identification

Fig. 1
[1] Track number search/Fast Forward, Reverse
[7] Manual
[9] Display
[11] Function buttons
F1: Repeat play
F2: Scan play/Random play
F6: Display Switching/Disc title

Fig. 3
[28] Play elapse time display
[29] Manual
[30] Track number

Listening to the CD player

1. Load the CD player with a disc.
   Play starts automatically.
   - If there is aready a disc loaded in the player, press button [3] to switch sources.
2. Adjust volume and tone.
3. To stop CD play, press button [3] to switch the source OFF or eject the disc.
   - Refer to the CD player's instruction manual for details concerning disc loading and ejection.

Track Number Search

The desired track on the disc currently being played can be selected by track (or song) number.
Make sure "MANU" [29] is not displayed on the display of the head unit. If it is, press the button [7] for more than 2 seconds and turn it off.
Press the (►) side of button [1] to increase the number at Position [30], or the (◄) side to decrease the number. Holding either side of button [1] down changes the track number at high speed.

Using Fast Forward and Reverse

1. Press the button [7] for more than 2 seconds. "MANU" [29] appears on the display.
2. Press the (►) side of button [1] for fast forward, and the (◄) side for reverse.
   - *Sound is output during fast forward and reverse operations.*

Pausing

1. Press button F4 in Bank [11] to pause during disc playback ("PAUSE" appears on display [28] of the head unit).
2. Press button F4 in Bank [11] again to release pause.
   - *You can select a track using the track number search during pause. ("PAUSE" is off while a track is being searched.) When the track search ends, the found track is paused at its beginning.*

Repeat

1. To repeat the music you are listening to, press button F1 in Bank [11] ("RPT" appears on the display [28] of the head unit).
2. To cancel music repeat, press button F1 in Bank [11] ("RPT" disappears).

Random Play

1. To play music randomly, hold down button F2 in Bank [11] for more than 2 seconds ("RDM" appears on the display [28] of the head unit). Once the current track has been played, the microprocessor will randomly select the next and subsequent tracks.
2. To cancel random play, hold down button F2 in Bank [11] for more than 2 seconds again ("RDM" disappears).
   - *Since selections are played in random order, the same selection may be played twice in succession.*

Scan

The first parts of each track are played in succession for about 10 seconds. This function is useful to search for the track you want to listen to.
1. Press button F2 in Bank [11]. ("SCAN" appears on the display [28] of the head unit.) The first parts of all tracks are played in succession for about 10 seconds.
2. When you hear the track you want, press button F2 in Bank [11] again to cancel Scan. ("SCAN" disappears.) The track being played is when played to the end.
   - *The previous function automatically resumes when a piece of music with which Scan began returns.*

Disc Title Input

In a system with a multi-play CD player connected, you can input and memorize the title of the disc loaded in this unit.
When you play a disc whose title you have input and memorized, title indication in the head unit's display is possible.
- The ADPS function* of the multi-play CD player lets you enter titles for up to 100 discs. (With ITS [refer to the head unit's owner's manual], 100 discs can be registered. ADPS and ITS are multi-play CD player functions. For details refer to the head unit's owner's manual.)

* ADPS: Automatic Disc Program Selection

- A disc title can consist of up to 8 characters for a single disc.
  The letters and numbers you can input differ depending on the head unit.
- When the number of discs exceeds 100, discs not being played (information not being renewed) in memory are overwritten by the newest.
- One title is stored for each disc. The title stored for a disc is not erased after the disc is changed.

Entering Titles

1. Hold down button F6 in Bank [11] for more than 2 seconds to select title input mode.
2. Press the (◄) or (►) side of button [1] to select the input position. The input position moves continuously when you hold down either side of the button.

3. Select characters using the (+) or (–) side of button [1]. When you hold down either side of the button, the character changes continuously. Each press of the (+) side changes the character from "A → B → C →...", while each press of the (–) side changes the character from "C → B → A →...". To enter a space, press the space sign (_).
4. Enter all characters by repeating steps 2 and 3.
   Press button F6 in Bank [11] to store them in memory.
   The title will appear on the display of the head unit.

Display Switching

Each press of button F6 in Bank [11] switches the display of the head unit between the elapsed play time and disc title.
When you press one of the buttons of the head unit while the disc title is being displayed, the normal operation display will appear for 8 seconds.

Using the Clock Display

Parts Identification

Fig. 1

[9] Display
[10] 1: Hour adjustment
2: Minute adjustment
3: Quick clock adjustment button
[11] Function buttons
F5: Clock

Displaying the Time

The clock is displayed while button F5 in Bank [11] is depressed. Press button F5 in Bank [11] again to turn off the clock display.

- The clock display can be used only when the main unit is in operation.
- When the clock display is ON, pressing other buttons will release the clock display. The display will be restored approximately 25 seconds after the button operation has been completed.

Adjusting the Time

Adjusting Hours

While holding down button F5 in Bank [11], press button 1 in bank [10], to adjust the hour setting of the clock. Each press of button 1, advances the hour setting by one hour, and holding it down advances the setting at high speed.

Adjusting the Minutes

While holding down button F5 in Bank [11], press button 2 in Bank [10], to adjust the minute setting of the clock. Each press of button 2, advances the minute setting by one minute, and holding it down advances the setting at high speed.

Adjust the clock with the "Immediate clock adjustment"

Hold down button F5 in Bank [11] and press button 3 in Bank [10]. The time becomes "○○:00".

- If the "minute" indication is 00 to 29, it is discarded, and the clock starts.
  (Example: If the time is "10:18", it becomes "10:00".)
- If the "minute" indication is 30 to 59, it is rounded up, and the clock starts.
  (Example: If the time is "10:36", it becomes "11:00".)

3. DISASSEMBLY

● Removing the Case (not shown)

1.Insert and turn a flat screwdriver at locations indicated by arrows to remove the case.

● Removing the Cassette Mechanism Assy (Fig.10)

1.Remove the four screws.
2.Disconnect the connector.
3.Remove the cassette mechanism assy.

● Removing the Front Grille Assy (Fig.10)

1.Disconnect the two stoppers indicated by arrows.
2.Remove the front grille assy.

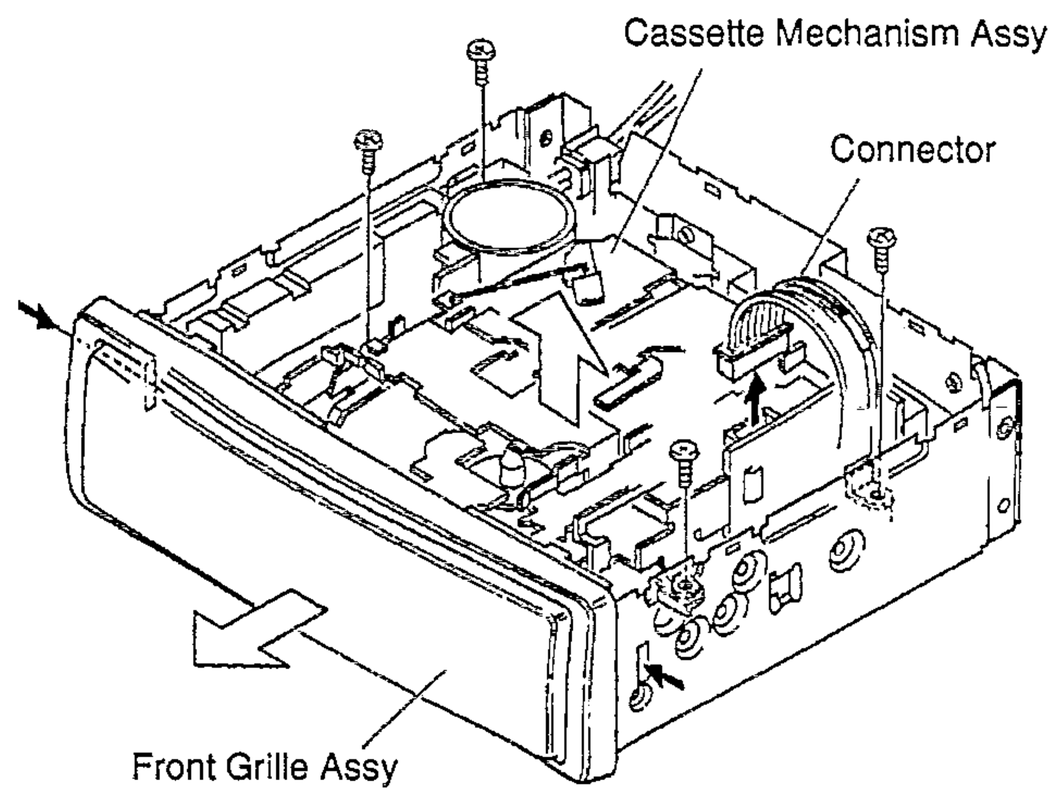

Fig.10

● Removing the Chassis Unit (Fig.11)

1.Remove the screw A, and then remove the holder.
2.Remove the two screws B and two screws C.
3.Unbend the tabs at three locations indicated by arrows.
4.Remove the chassis unit.

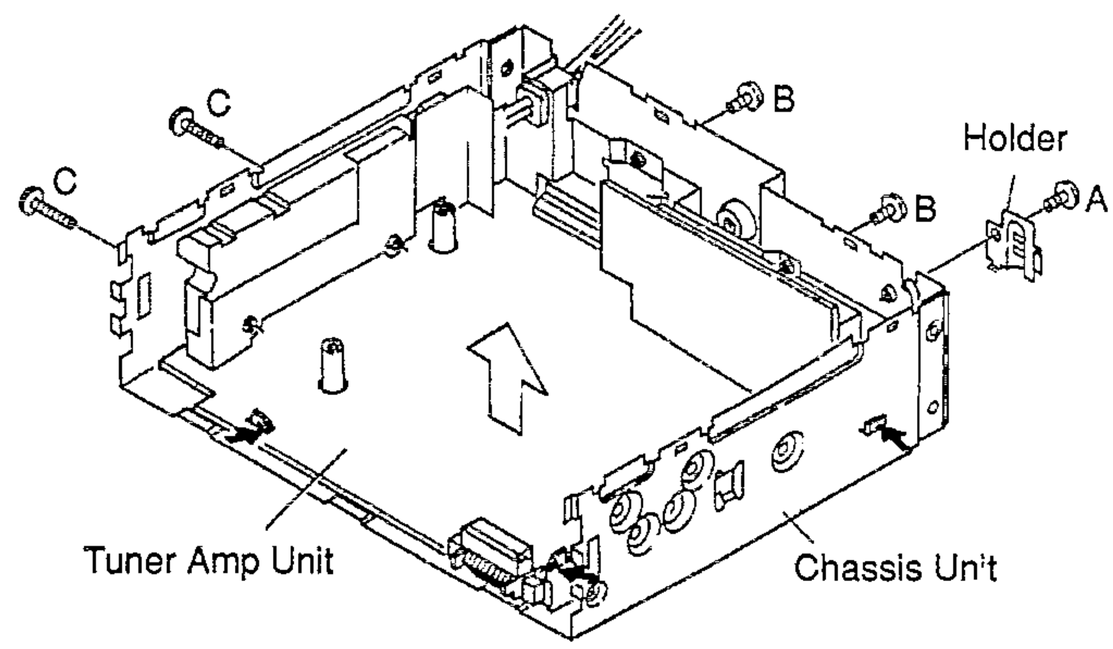

Fig.11

4. ADJUSTMENT

4.1 TEST MODE

Test mode is mainly used adjustment of IP BUS type CD multi players.(Such as CDX-P610)

- Switching to test mode
  While pressing the 4, 6 keys together, switch the back up and ACC ON.
- Canceling test mode
  Switch the back up and ACC off.
- SINGLE/10TRK/32TRK will continue to operate even after the key is released.Tracking closed the moment C-MOVE is released.
- JUMP MODE resets to SINGLE as soon as power is switched off.

● Flow Chart

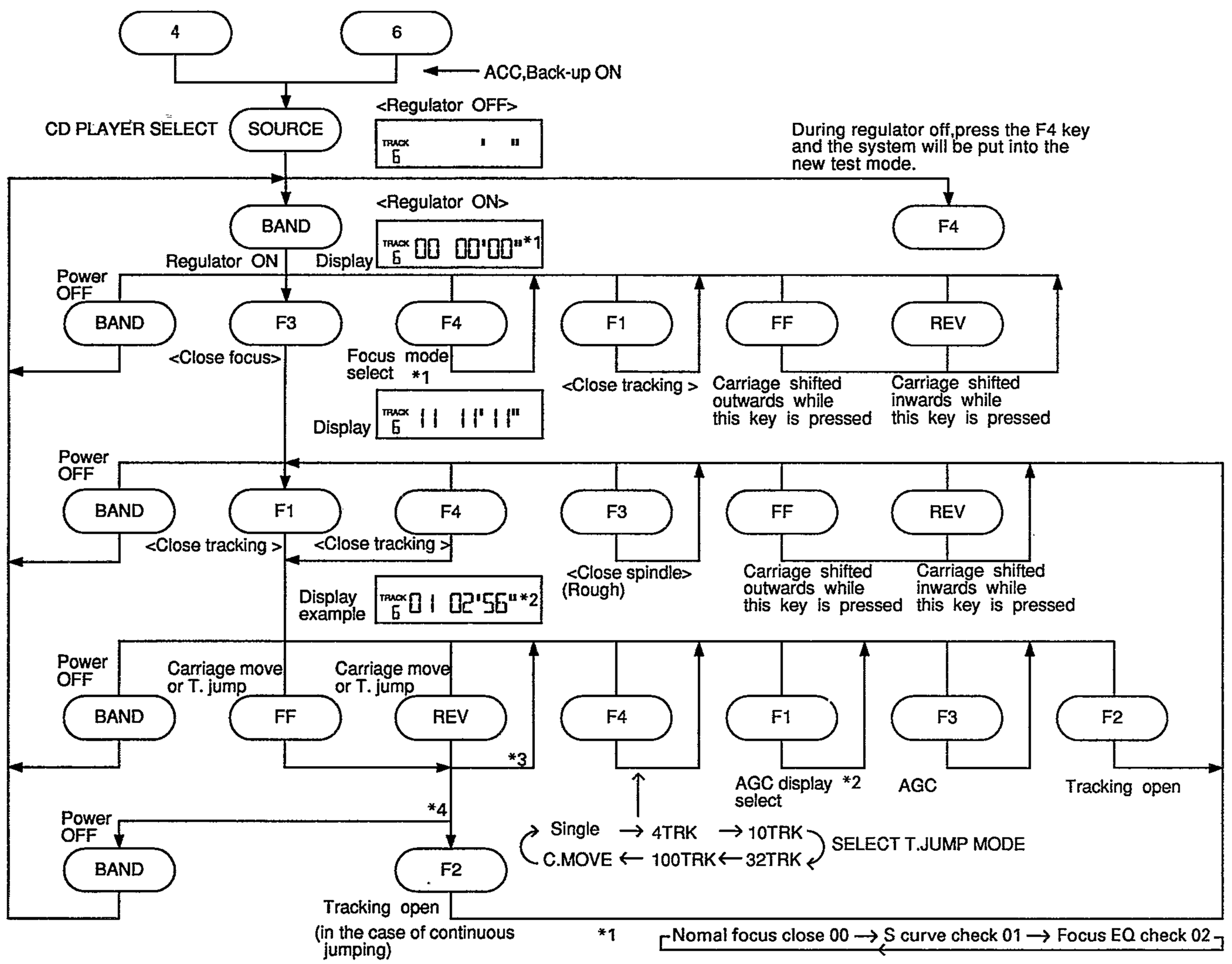

*1 Nomal focus close 00 → S curve check 01 → Focus EQ check 02

*2 Nomal display → Focus gain → Track gain

*3 100 TRK jump & carriage move continue only while the keys are pressed

*4 SINGLE/4/10/32 → continuous even after key release

4.2 TUNER SECTION

● Connection Diagram

NOTE:
Select C1 so that total capacity of 80pF is attained from the direction of the receiver jack.
Z: Output impedance of SSG.

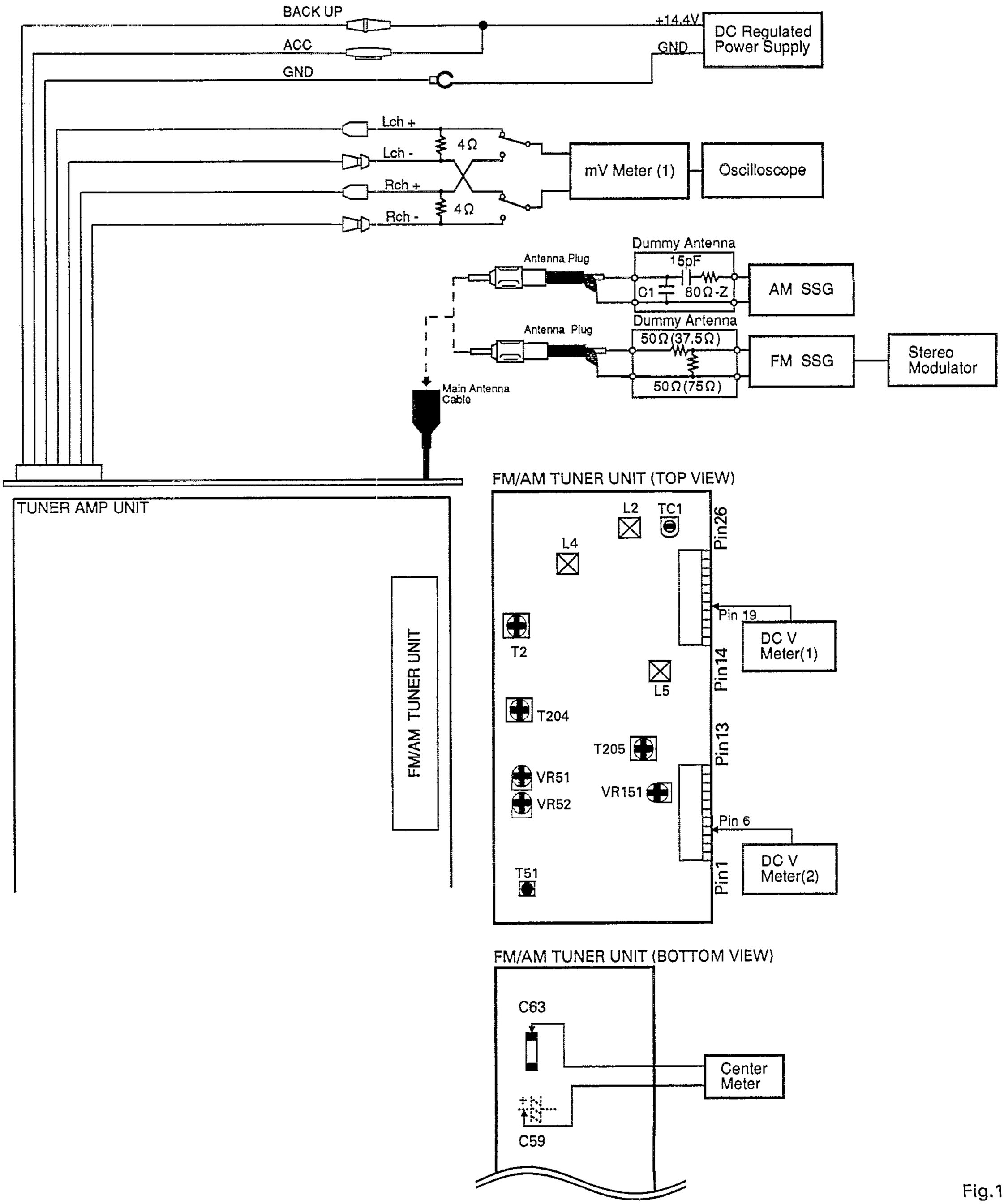

Fig.12

AM ADJUSTMENT(KEH-P4200/UC, P4250/ES) (ES model tuning steps at 10kHz)

	No.	AM SSG(400Hz,30%) Frequency(kHz)	AM SSG(400Hz,30%) Level(dBμV)	Displayed Frequency(kHz)	Adjustment Point	Adjustment Method (Switch Position)
IF	1	1000	20	1000	T204,T205	mV Meter(1) : Maximum

AM ADJUSTMENT(KEH-P20/EW, P10/EW, P4110/EE, P4250/ES) (ES model tuning steps at 9kHz)

	No.	AM SSG(400Hz,30%) Frequency(kHz)	AM SSG(400Hz,30%) Level(dBμV)	Displayed Frequency(kHz)	Adjustment Point	Adjustment Method (Switch Position)
IF	1	999	20	999	T204,T205	mV Meter(1) : Maximum

FM ADJUSTMENT(KEH-P4200/UC,P4250/ES) (* 108MHz : ES Model)

Modulation M:MONO MOD., 400Hz 100%(75kHz Dev.)
S:STEREO MOD., 1kHz, L or R=100%(67.5kHz+7.5kHz Dev.)

NOTE:Before proceeding to further adjustments after switching power ON, let the tuner run for ten minutes to allow the circuits to stabilize.

	No.	FM SSG Frequency(MHz)	FM SSG Level(dBf)	Displayed Frequency(MHz)	Adjustment Point	Adjustment Method (Switch Position)
TUN Volt	1	107.9 M	65	107.9 *(108)	L5	DC V Meter(1) : 6.5V±0.1V
IF	1	98.1 M	65	98.1	T51	Center Meter : 0
ANT,RF	1	98.1 M	5	98.1	L2,L4	mV Meter(1) : Maximum
IFT	1	98.1 M	10	98.1	T2	mV Meter(1) : Maximum (STEREO MODE)
Soft Mute	1	98.1 M	65	98.1	·····	mV Meter(1) : A (STEREO MODE)
	2	98.1 M	15	98.1	VR52	mV Meter(1) : A-3dB
ARC	1	98.1 S	40	98.1	VR151	mV Meter(1) : Separation 5dB
SD	1	98.1 S	22	98.1	VR51	DC V Meter(2) : Approx. 5V

FM ADJUSTMENT(KEH-P4110/EE)

	No.	FM SSG Frequency(MHz)	FM SSG Level(dBf)	Displayed Frequency(MHz)	Adjustment Point	Adjustment Method (Switch Position)
TUN Volt	1	108.0 M	65	108.0	L5	DC V Meter(1) : 8.0V±0.1V
IF	1	98.1 M	65	98.1	T51	Center Meter : 0
ANT,RF	1	106.1 M	10	106.1 M	L2,L4	mV Meter(1) : Maximum
IFT	1	98.1 M	10	98.1	T2	mV Meter(1) : Maximum (STEREO MODE)
Soft Mute	1	98.1 M	65	98.1	·····	mV Meter(1) : A (STEREO MODE)
	2	98.1 M	15	98.1	VR52	mV Meter(1) : A-3dB
ARC	1	98.1 S	40	98.1	VR151	mV Meter(1) : Separation 5dB
SD	1	98.1 S	22	98.1	VR51	DC V Meter(2) : Approx. 5V

FM ADJUSTMENT(KEH-P20/EW, P10/EW)

	No.	FM SSG Frequency(MHz)	FM SSG Level(dBf)	Displayed Frequency(MHz)	Adjustment Point	Adjustment Method (Switch Position)
TUN Volt	1	108.0 M	65	108.0	L5	DC V Meter(1) : 6.5V±0.1V
IF	1	98.1 M	65	98.1	T51	Center Meter : 0
TRIMMER	1	·····	·····	·····	TC1	Initial setting(before measurement) of trimmer should be that of Fig.12.
ANT,RF	1	98.1 M	5	98.1	L2,L4	mV Meter(1) : Maximum
IMAGE	1	129.3 M	70—90	107.9	TC1	mV Meter(1) : Minimum
IFT	1	98.1 M	10	98.1	T2	mV Meter(1) : Maximum (STEREO MODE)
Soft Mute	1	98.1 M	65	98.1	·····	mV Meter(1) : A (STEREO MODE)
	2	98.1 M	15	98.1	VR52	mV Meter(1) : A-3dB
ARC	1	98.1 S	40	98.1	VR151	mV Meter(1) : Separation 5dB
SD	1	98.1 S	22	98.1	VR51	DC V Meter(2) : Approx. 5V

5. ERROR NUMBERS AND NEW TEST MODE

● Indicating An Error Number

If the CD should fail to operate in CD multi-player or if an error has taken place during the operation and resulted in an error, the player will enter into the error mode. And the cause of such error is numerically indicated.
This is armed at assisting an analysis or repair.

(1) Basic Means of Display

- With ERROR indicated in "MODE" on IP-BUS Display date, an error code is transmitted by the use of MIN and SEC. Identical date are transmitted with MIN and SEC.
- Examples of Display ERROR-XX

(2) Error Codes

Error Code	Classification	Description	Cause/Detail
10	ELECTRIC	Carriage home failure	Carriage doesn't move to or from the innermost position →Home switch failed and/or carriage immobile
11	ELECTRIC	Focus failure	Focus failed →Defects, disc upside-down, severe vibration
12	ELECTRIC	SETUP failure Subcode failure	Spindle failed to lock or subcode unreadable →Spindle defective, defect, severe vibration
14	ELECTRIC	Mirror failure	Unrecorded CD-R The disc is upside-down, defects, vibration
17	ELECTRIC	Set up failure	AGC protect failed →Defects, disc upside-down, severe vibration
30	ELECTRIC	Search time out	Failed to reach target address →Carriage/tracking defective and/or defects
A0	SYSTEM	Power failure	Power overvoltage or short circuit detected →Switching transistor defective and/or power abnormal
50	MECHANISM	An error upon ejection	MAG switch release time has time out Elevation time out when eject
60	MECHANISM	An error while putting in and out the tray	Tray in / out time has time out Tray is caught when put in
70	MECHANISM	An error upon elevation	Elevation time has time out
80	MECHANISM	An error with an empty magazine inserted	No disc is available

* Setup means a series of operations after focusing up to sound output.

● New Test Mode(aging operation and setup analysis)

The single CD player plays in normal mode. After being set up, it will display FOK (focus), LOCK (spindle), subcode, sound skip, protection against a mechanical error or the like, occurrence of an error, cause and time of an expiry, if any, (and disc number)
During the setup, the CD software operation status (internal RAM and C-point)is displayed.

(1) How to enter NEW TEST Mode

See the test mode flow chart Page 1-13.

(2) Relations of keys between TEST and NEW/ TEST Modes

Keys	Test Mode		New Test Mode	
	Regulator OFF	Regulator ON	PLAY in progress	Error Occurred, Protection Activated
BAND	Regulator ON	Regulator OFF	—	Time of occurrence / cause of error select
FF	—	FWD-Kick	TRACK UP / FF	—
REV	—	REV-Kick	TRACK DOWN /REV	—
F1	—	Tracking close	RPT	—
F2	—	Tracking open	RANDOM	—
F3	—	Focus close	ITS	—
F4	To New Test Mode	Focus Mode Select	PAUSE	—

Operations,such as EJECT, CD ON/OFF, etc. are performed normally

(3) Error Cause (Error Number) Code

Error Code	Classification	Mode	Description	Cause	Detail
40	ELECTRIC	PLAY	FOK=L 100ms	Put out of focus	Scratch, Stain, Vibration, Servo defect, etc...
41	ELECTRIC	PLAY	LOCK=L 150ms	Spindle unlock	
42	ELECTRIC	PLAY	Subcode unacceptable 500ms	Failed to read subcode	
43	ELECTRIC	PLAY	Sound skipped	Last address memory operated	

(4) Indicating an Operation Status During Setup

Status No.	Description	Protection operation
01	Carriage home mode started	None
02	Carriage moving inwards	10-second time out, Home switch failed
03	Carriage moving outwards	10-second time out, Home switch failed
05	Carriage moving outwards	None
11	Setup started	None
12	Spindle turn/Focus search started	None
13	Waiting for focus closure (XSI=L)	Failure to close focus
10,14	Waiting for focus closure (FOK=H)	Failure to close focus
15, 16, 17	Focus closed, Tracking open	Focus disrupted
18	During focus AGC Subcode waiting	Focus disrupted
19	During tracking AGC	Disrupted focus
20	Waiting for MIRR, LOCK or subcode read Carriage closed, SPINDLE=ADAPTIVE	Focus disrupted, MIRR NG, Failure to lock, failed to read subcode

(5) Example of Display.

·SET UP in progress

TNo.	Min	Sec
11	11	11

·Operation (PLAY, SEARCH, etc.) in progress perfectly identical with that in the normal mode.

·Protection/Error upon occurrence

(a) Error number indicated

ERROR–xx

Select the display with the BAND key.

(b) Track number and absolute time indicated

TNo	Min	Sec
10	40	05

● ICs

PA2022B

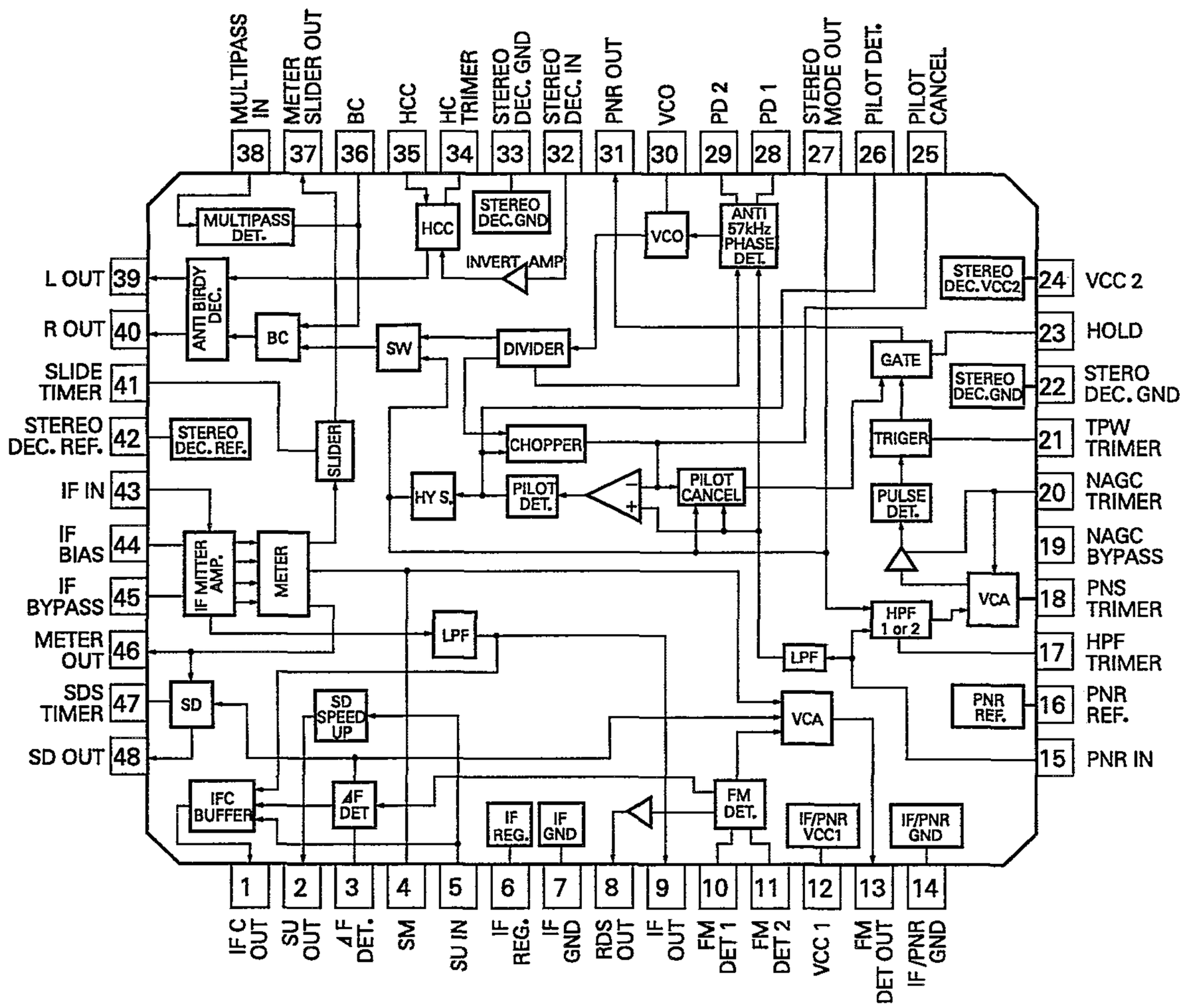

SN761025DL

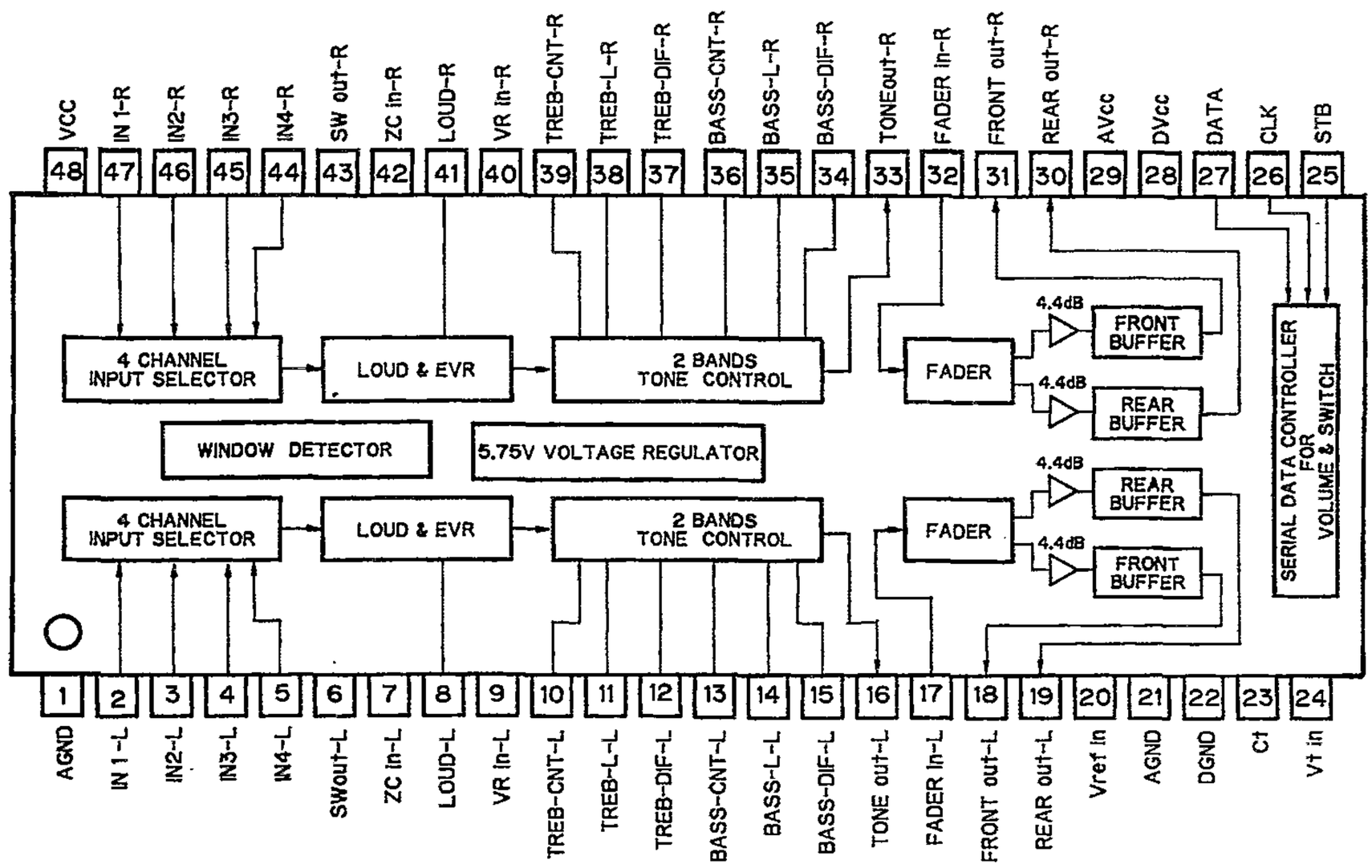

LC72146M

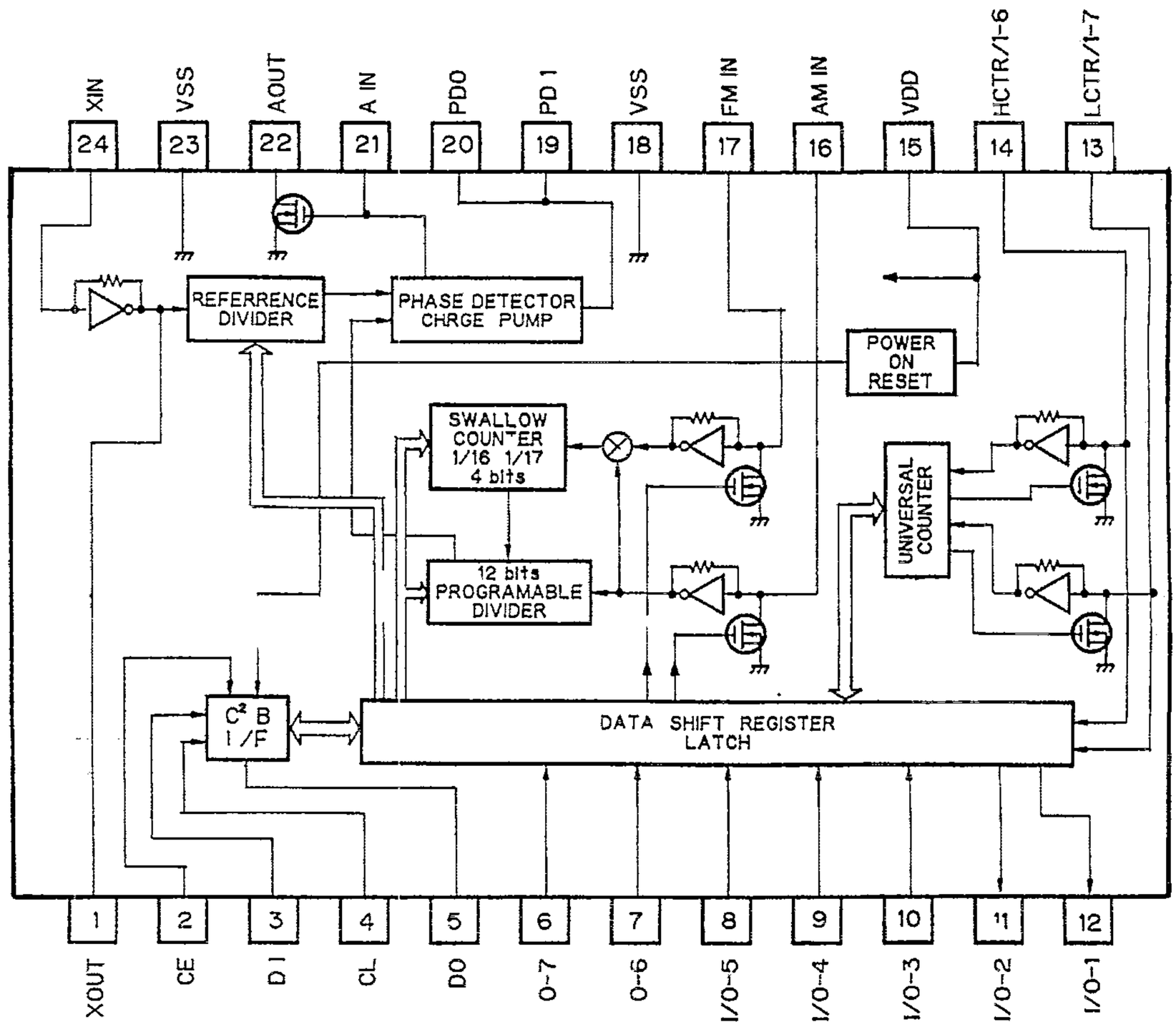

PAL003A

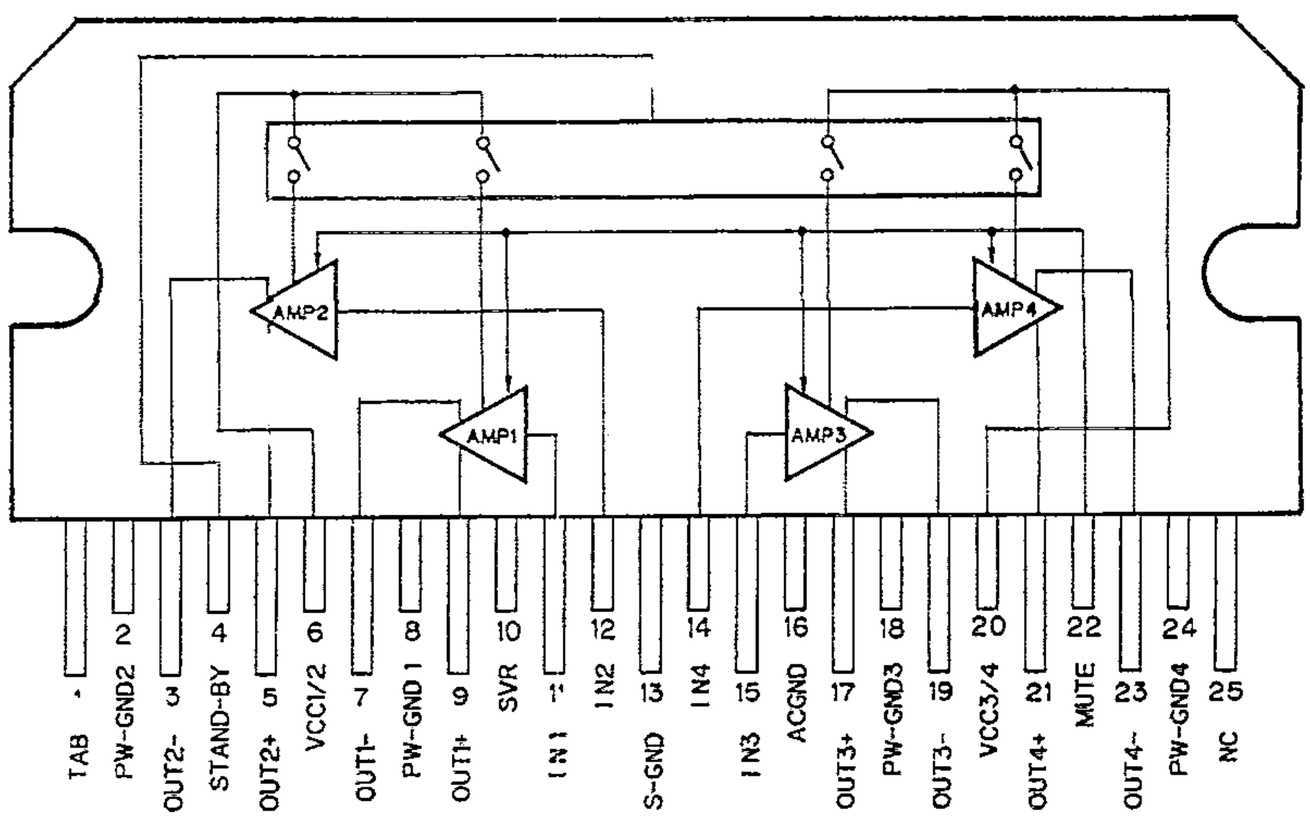

● Pin Functions (PDR016A)

Pin No.	Pin Name	I/O	I/O Format	Function and Operation
1	NC			Not used
2,3	SEL1,2	I		Model select pin
4	AVSS			GND
5,6	SEL3,4	I		Model select pin
7	AVREF1	I		A/D converter reference voltage input
8	KYDT	I		Key data input
9	DPDT	O		Display data output
10	$\overline{\text{SWVDD}}$	O	C	Key board unit power supply control output
11–13	NC			Not used
14	MONO	O	C	Forced mono output
15	SD	I		FM SD input
16	PDI	I		Data input from PLL IC
17	PDO	O	C	Data output for PLL IC
18	PCK	O	C	Clock output for PLL IC
19	PCE	O	C	Chip enable output for PLL IC
20–23	NC			Not used
24	LPASS	O		Low pass filter control output
25	CORR	O		Error output
26	RECIVE			Not used
27-32	NC			Not used
33	VSS			Gnd
34	$\overline{\text{TMUTE}}$	O	C	Tuner mute output
35	DKOUT	O	C	Mute release output for mechanism
36	MUTE	O	N	Mute output
37,38	NC			Not used
39	$\overline{\text{HARF}}$	I		Cassette tape set sense input
40	ILMPW	O	C	Illumination power supply control output
41	VDT	O	C	Data output for electronic volume
42	VCK	O	C	Clock output for electronic volume
43	VST	O	C	Strobe pulse output for electronic volume
44	NC			Not used
45	PEE	O	C	Beep tone output
46	SYSPW	O	C	System power supply control output
47	AM	O	C	AM power control output
48	FM	O	C	FM power control output
49	PCL	O	C	Clock adjustment output
50	PELL	O	C	Beep tone level control output
51	MECPW	O	C	Cassette mechanism power output
52	MTL	O	C	Cassette mechanism tape select output
53	NR	O	C	Dolby NR ON/OFF select output
54	FLEX	O	C	FLEX output
55	ASENBO	O	C	Slave power supply control output
56	TX	O	C	IP BUS data output
57	RX	I		IP BUS data input
58	$\overline{\text{IPPW}}$	O	C	Power supply control output for IP BUS interface IC
59	$\overline{\text{MCMUTE}}$	I		Cassette mechanism mute input
60	RESET	I		Reset input
61	$\overline{\text{RCK}}$	I		RDS demodulation clock input
62	$\overline{\text{BSENS}}$	I		Back up power sense input
63	$\overline{\text{ASENS}}$	I		ACC power sense input
64	$\overline{\text{DSENS}}$	I		Grille detach sense
65	$\overline{\text{TAPLD}}$	I		Tape loading input
66	NOR/$\overline{\text{REV}}$	I		Tape direction input
67	CLKIN	I		Clock input from PLL IC
68	VDD			Power supply
69,70	X2,X1			Crystal oscillating element connection pin

Pin No.	Pin Name	I/O	I/O Format	Function and Operation
71	VPP			Not used
72	XT2			Not used
73	TESTIN	I		Test program mode input
74	AVDD			Power supply
75	AVREF0	I		A/D converter reference voltage input
76	FMSL	I		FM signal level input
77	AMSL	I		AM signal level input
78	NC			Not used
79	NC			Not used
80	NC			Not used

*PDR016A

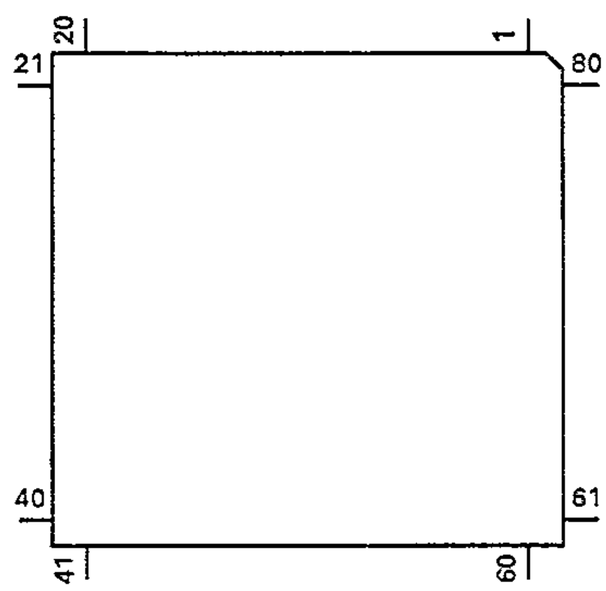

IC's marked by are MOS type.*
Be careful in handing them because they are very liable to be damaged by electrostatic induction.

I/O Format	Meaning
C	C MOS
N	N channel open drain

*S-80734AN

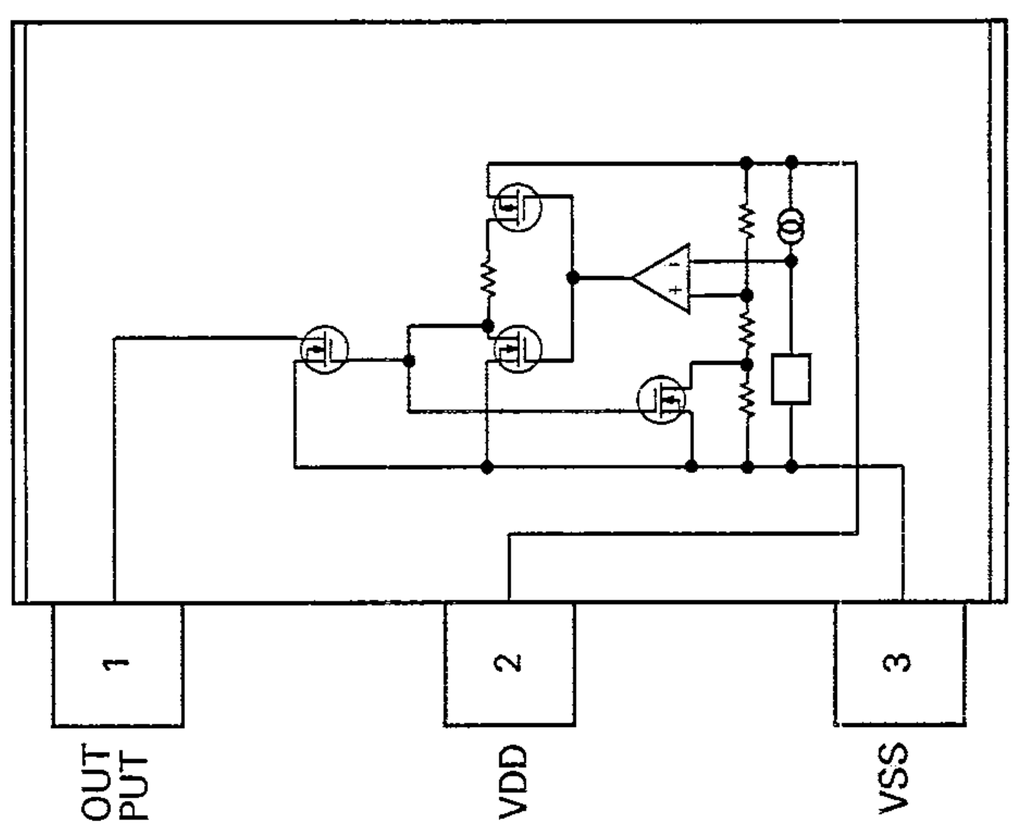

PA0059AM

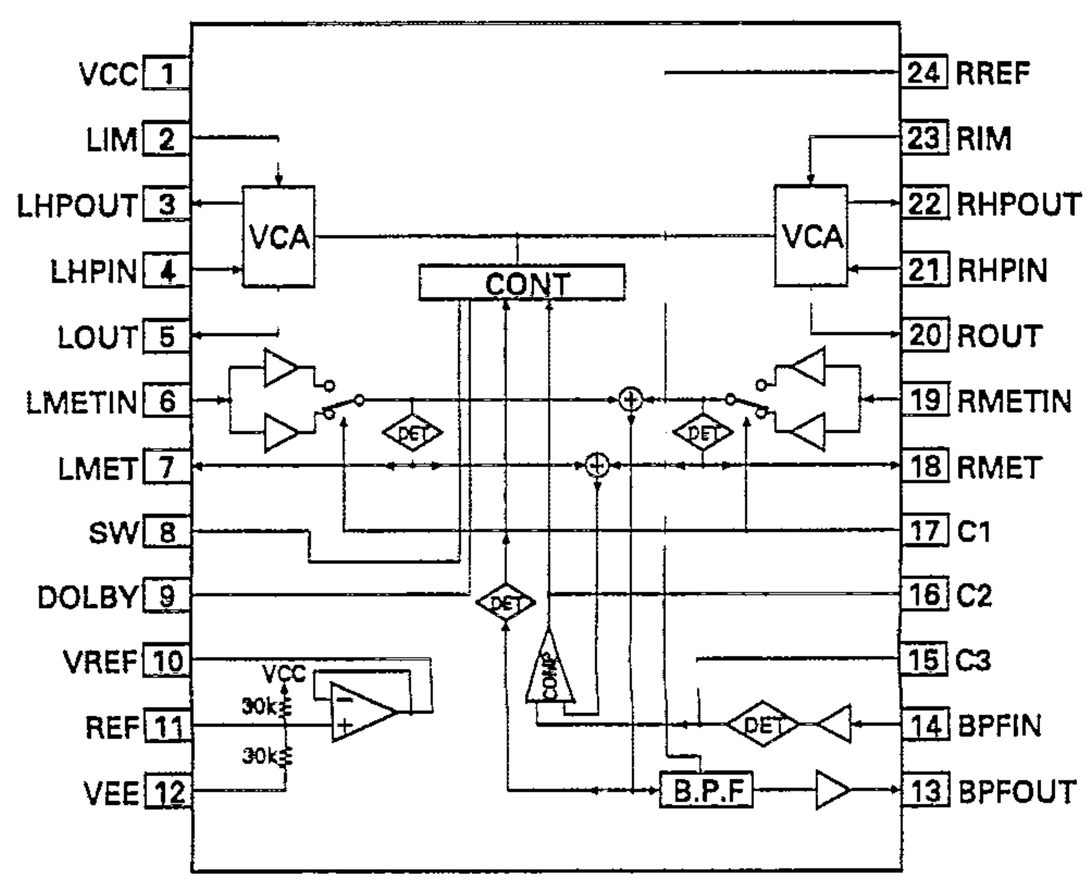

6. ELECTRICAL PARTS LIST

NOTE:

- Parts whose parts numbers are omitted are subject to being not supplied.
- The part numbers shown below indicate chip components.

Chip Resistor
RS1/○S○○○J,RS1/○○S○○○J
Chip Capacitor (except for CQS.....)
CKS....., CCS....., CSZS.....

Unit Number : CWM4061
Unit Name : Tuner Amp Unit

MISCELLANEOUS

=====Circuit Symbol & No. Part Name=====	Part No.
IC 251	TA8162SN
IC 301	PA0059AM
IC 451	SN761025DL
IC 501	LC72146M
IC 551	PAL003A
IC 601	PDR016A
IC 602	S-80734AN
IC 851	TA2050S
IC 852	PA0051AM
Q 251 252 253 301 501 504 552 906	2SC2458
Q 302 851 910	2SA1048
Q 481 482	DTC143TK
Q 483	DTA124EK
Q 484	DTA124ES
Q 485 486	DTC143TS
Q 505	2SK330
Q 551 553	DTC124EK
Q 852 909 912 916 918 919	DTC124ES
Q 903	2SD1859
Q 907	2SC2458
Q 908 917	2SB1242
Q 911	2SB1243
Q 913	2SD2395
Q 914 915	2SA1674
Q 2001	2SC2712
D 251 301 302 303 505 506 553 554 556 601	1SS133
D 252	1SS133
D 253 917	HZS6LB2
D 504	RD3R0ESB2
D 555	HZS9LA2
D 901 902 903 904 905 919	ERA15-02
D 906	HZS6LB1
D 909	HZS7LC3
D 910	HZS9LA1
D 911 912 913 914 915 916	1SS133
D 918	HZS9LB2
L 501 601 851 901 Ferri-Inductor	LAU2R2K
L 502 Ferri-Inductor	CTF-157
L 602 Ferri-Inductor	LAU101K
X 501 Crystal Resonator	CSS1334
X 601 Ceramic Resonator	CSS1310
S 601 Switch(Reset)	CSG1046
FM/AM TunerUnit	CWE1362

RESISTORS

=====Circuit Symbol & No. Part Name=====	Part No.
R 251 253 272 530 535 546 574 607 857 863	RS1/10S473J
R 252	RS1/10S103J
R 254 255 256 505 512 519 603 858	RS1/10S222J
R 257 258	RS1/10S333J
R 259	RS1/8S470J
R 260	RS1/10S470J
R 261 262	RS1/10S334J
R 263 264	RS1/10S133J
R 267 270 305 471 472 853 854 910 928 930	RS1/10S223J
R 268	RS1/8S223J
R 269	RS1/10S222J
R 271	RS1/10S472J
R 273	RS1/8S0R0J
R 274 277 310 2001 2002	RS1/10S0R0J
R 275	RD1/4PS333JL
R 278	RS1/10S104J
R 303	RD1/4PS512JL
R 304	RS1/10S512J
R 306 532	RS1/10S102J
R 307 572	RS1/8S103J
R 308	RS1/10S563J
R 309	RS1/16S0R0J
R 310	RS1/10S0R0J
R 451 452	RS1/16S102J
R 453 454	RS1/16S162J
R 455	RD1/4PS152JL
R 456	RS1/10S152J
R 457 458	RS1/16S472J
R 459 460	RS1/16S272J
R 461 462	RS1/16S151J
R 463 464	RS1/16S101J
R 465	RS1/10S331J
R 466	RS1/16S331J
R 469 470	RS1/10S471J
R 473	RS1/10S223J
R 474 513 528 567 906 912 933 935	RS1/10S103J
R 475 578	RD1/4PS471JL
R 476 932	RS1/8S471J
R 477 478	RS1/16S104J
R 501	RS1/10S472J
R 502 514 529 608 609 610 859 904 919	RS1/10S472J
R 503 531	RS1/8S472J
R 515	RS1/10S152J
R 520 605	RS1/8S102J
R 521 522 523 524 525 573	RS1/10S102J
R 526 538 2031	RS1/8S222J
R 533 534	RS1/8S473J
R 536 537 539 916 921 922 923	RD1/4PS222JL
R 541	RS1/8S0R0J
R 545	RS1/8S104J
R 551	RS1/8S683J
R 568	RS1/10S153J
R 569	RS1/10S221J
R 570 861 862	RS1/10S101J
R 571 611	RD1/4PS103JL
R 577	RD1/4PS471JL
R 579	RS1/8S0R0J
R 606	RS1/10S124J
R 614	RS1/16S223J
R 851 852	RS1/10S181J

=====Circuit Symbol & No. Part Name=====	Part No.
R 855 856 865 866 934 936	RS1/10S102J
R 860	RS1/10S620J
R 864 905 907 908 913 918	RS1/10S473J
R 867 868	RD1/4PS122JL
R 869 870	RS1/16S472J
R 903	RS1/10S101J
R 909	RS1/10S1R0J
R 911 929	RD1/4PS102JL
R 917	RD1/4PS473JL
R 920	RS1/10S0R0J
R 924 925	RD1/4PS472JL
R 926 927	RD1/4PS1R5JL
R 931 938	RD1/4PS331JL
R 2004 2005 2010	RS1/10S0R0J
R 2007 2008	RS1/10S473J
R 2009	RS1/10S332J
R 2021	RS1/16S0R0J
CAPACITORS	
C 251 309 316 455 456 482 859	CKSQYB104K16
C 252 573	CKSQYB104K25
C 253	CKSQYB104K16
C 254 310 319 321 904	CEA101M10LL
C 255 256 301 302 307 308 311 312 318 453	CEA4R7M35LL
C 257 258 303 304 515 522 908	CKSQYB103K50
C 259 260	CEA101M10LL
C 261 262	CKSQYB821K50
C 263 314 315 457 458 463 464 473	CEA100M16LL
C 305 306	CKSQYB222K50
C 317 461 462 572 574 851 852 853 854 855	CEA010M50LL
C 320	CEA470M10LL
C 451 452 469 470 474 607	CEA2R2M50LL
C 454 520	CEA4R7M35LL
C 459 460	CKSRYB822K25
C 465 466	CKSRYB152K50
C 467 468 511 2021	CCSRCH101J50
C 471 472	CKSQYB333K25
C 477	CKSQYB332K50
C 478	CKSRYB103K25
C 479 480	CEA100M16LL
C 481	CEA470M10LL
C 483 484	CKSQYB183K25
C 485 486	CKSRYB102K50
C 487	CEA3R3M50LL
C 488	CEA3R3M50LL
C 501 519 575 576 606	CCSQCH101J50
C 503	CKSYB473K16
C 504 506 905	CKSQYB473K16
C 505 521	CKSQYB223K25
C 507	CKSQYB102K50
C 513 4.7 μF/16V	CCH1005
C 514	CFTLA474J50
C 517 518	CCSQCH150J50
C 524 0.047 μF	CCG1008
C 525	CKSQYB473K16
C 551 552 553 554	CEAR22M50LL
C 569	CEAS472M16
C 570	CEA220M16LL
C 571	CEA330M10LL
C 579	CCSQCH101K50
C 580	CKSQYB103K50
C 604	CEA4R7M35LL
C 605	CKSQYB473K16
C 856	CEA010M50LL
C 857 858	CEA100M16LL
C 860	CKSYB104K16
C 902 1000 μF/16V	CCH1185
C 903	CKSQYB473K50
C 906 470 μF/16V	CCH1183

=====Circuit Symbol & No. Part Name=====		Part No.
C 907	330 μF/10V	CCH1181
C 910	100 μF/16V	CCH1179
C 911		CKSQYB473K16
Unit Number : CWM4065		
Unit Name : Key Board Unit		
MISCELLANEOUS		
IC 961		PD6122A
D 951		MA3062L
D 952		UZMA6R2
L 951	Ferri-Inductor	LAU150K
X 951	Ceramic Resonator	CSS1312
S 951 952 953 954	Switch	CSG1044
S 955 956 957 958	Switch	CSG1044
S 959 960 961 962	Switch	CSG1044
S 963 964 965 966	Switch	CSG1044
S 967 968 969	Switch	CSG1044
IL 951 952 953 954	Lamp 14V40mA	CEL1341
IL 955 956	Lamp 14V40mA	CEL1341
LCD951	LCD	CAW1314
RESISTORS		
R 951 952		RS1/10S222J
R 953 954 955 956 957 958 959 960 961 962		RS1/10S471J
R 963		RS1/10S471J
R 964		RS1/10S472J
R 966		RS1/10S102J
CAPACITORS		
C 951 952 953		CKSQYB103K25
C 954		CEA100M16LS2
Unit Number : CWE1362		
Unit Name : FM/AM Tuner Unit		
MISCELLANEOUS		
IC 1		PA2021B
IC 2		PA2022B
Q 1		3SK263
Q 2		2SC2712
Q 3		DTC124EU
Q 51		DTC124TU
Q 52		2SC4098
Q 190		2SA1586
Q 191 202		2SC2712
Q 201		2SK932
D 1		1SV251
D 2 3 4		KV1410-F1
D 5		MA151WK
D 6 7		RD39JSB3
D 8 201		MA157-MR
D 191		MA157-MR
D 202		MA110-1A
D 203		SVC253
L 1	Inductor	LCTBR12K2125
L 2 4		CTC1108
L 3		CTC1105
L 5		CTC1107
L 51	Ferri-Inductor	LAU2R2K
L 52	Ferri-Inductor	LAU150K
L 201	Ferri-Inductor	LAU4R7K
L 203	Inductor 1mH	CTF1026
L 204	Ferri-Inductor	LAU151K
L 206	Inductor	LAU3R3K
L 207	Ferri-Inductor	LAU330K
T 2	Coil	CTE1077

=====Circuit Symbol & No. Part Name=====									Part No.
T 51				Coil					CTC1119
T 204				Coil					CTE1074
T 205				Coil					CTE1075
CF 51	52	201							CTF1320
CF 202									CTF1300
X 151									CSS1308
X 201				Crystal Resonator					CSS1111
VR 51				Semi-fixed 47kΩ(B)					CCP1210
VR 52				Semi-fixed 68kΩ(B)					CCP1211
VR 151				Semi-fixed 10kΩ(B)					CCP1206
RESISTORS									
R 1	3	16	20						RS1/16S223J
R 2									RS1/16S331J
R 4	14								RS1/16S563J
R 6									RS1/16S123J
R 8									RS1/16S271J
R 9									RS1/16S153J
R 10	32								RS1/16S682J
R 11									RS1/16S474J
R 13									RS1/16S104J
R 15	103	217							RS1/16S563J
R 17	21	206							RS1/16S332J
R 18									RS1/16S223J
R 22									RS1/16S560J
R 51									RS1/16S391J
R 52									RS1/16S182J
R 53									RS1/16S751J
R 54									RS1/16S223J
R 55	102	161	209	222					RS1/16S822J
R 56									RS1/16S272J
R 71									RS1/16S272J
R 72									RS1/16S821J
R 73									RS1/16S331J
R 74									RS1/16S681J
R 101									RS1/16S224J
R 104									RS1/16S822J
R 153	159	239							RS1/16S103J
R 154									RS1/16S123J
R 155									RS1/16S822J
R 156									RS1/16S822J
R 157									RS1/16S562J
R 158									RS1/10S682J
R 160	190								RS1/16S473J
R 161									RS1/16S103J
R 191	207								RS1/16S225J
R 192									RS1/16S221J
R 193									RS1/16S224J
R 194									RS1/16S225J
R 203									RS1/16S102J
R 204	213								RS1/16S222J
R 205									RS1/16S333J
R 208									RS1/16S752J
R 214	218								RS1/16S333J
R 215	224								RS1/16S330J
R 216									RS1/16S152J
R 220									RS1/16S100J
R 221									RS1/16S273J
R 298									RS1/16S225J
R 299									RS1/16S225J
CAPACITORS									
C 1									CCSQCH220J50
C 2	11	19	27	29	51	52	62	63	CKSRYB103K50
C 3									CCSRCH470J50
C 4									CCSRRH270J50
C 5									CCSRRH080D50

=====Circuit Symbol & No. Part Name=====									Part No.
C 6									CCSRRH040C50
C 8									CKSRYB102K50
C 9									CCSRCH470J50
C 10									CCSRRH100D50
C 12	13								CCSRCH050D50
C 14	20	21	151	227	228				CKSRYB103K50
C 15	55	58	101	161					CKSQYB104K16
C 16									CCSRCH020C50
C 17									CCSRRH100D50
C 18									CCSRRH090D50
C 23	56	104	162						CEA010M50LL
C 24	106	213	236						CKSRYB223K25
C 26	28	212							CEA330M10LL
C 27									CKSRYB103K50
C 31	73	152	153						CKSRYB333K16
C 32	103	105	206						CKSRYB222K50
C 34									CKSRYB682K50
C 53	54								CCSRCH270J50
C 57	64	66							CCSRCH101J50
C 59									CEAR47M50LL
C 61									CEAR22M50LL
C 72									CKSRYB102K50
C 102	154	156	163	203	219	238			CKSQYB473K16
C 155									CEAR68M50LL
C 158									CEA100M16LL
C 159									CCSRCH271J50
C 160									CKSYB105K16
C 164	209	210	215	220	223	225	235	239	CKSRYB103K50
C 190									CKSRYB223K25
C 191									CEA150M10LS
C 201									CKSRYB222K50
C 204									CCSRCH151J50
C 205	221								CCSRCH680J50
C 207									CEA470M6R3LL
C 208									CCSRCH330J50
C 211									CKSYB105K16
C 214	230								CKSRYB472K50
C 216									CCSRCH100D50
C 217									CCSRCH221J50
C 218									CEA4R7M35LL
C 222									CCSRCH150J50
C 224									CCSRUJ181J50
C 226									CEA4R7M35LL
C 229									CEAR68M50LL
C 232									CCSRTH180J50
C 233									CKSRYB332K50
C 234									CEA220M6R3LL
C 240									CKSRYB103K50
Unit Number :									
Unit Name : P.C.Board(A)									
S 2									Switch(FWD/REV) ESH1003
Unit Number :									
Unit Name : P.C.Board(B)									
S 3									Switch(TAPE/TUN) ESN1011
S 4									Switch(MUTE B) ESH1004
Miscellaneous Parts List									
S 1									Switch(MUTE A) ESN1014
M 1									Motor Unit EXA1304
HD 1									Head Assy EXA1366

● The KEH-P4250/ES, KEH-P4110/EE, KEH-P20/EW, and KEH-P10/EW Parts Lists enumerate the parts which differ from those enumerated in the KEH-P4200/UC Parts List only. The parts other than those enumerated in the former are identical with those in the latter, to which you are requested to refer, accordingly. The KEH-P4200/UC Parts List is given on page,1- 23.

Tuner Amp Unit

Circuit Symbol & No.	KEH-P4200/UC Part No.	KEH-P4250/ES Part No.	KEH-P4110/EE Part No.	KEH-P10/EW KEH-P20/EW Part No.
IC301	PA0059AM	PA0059AM	PA0059AM	·····
Q301	2SC2458	2SC2458	2SC2458	·····
Q302	2SA1048	2SA1048	2SA1048	·····
Q484	DTA124ES	DTA124ES	DTA124ES	·····
Q485,486	DTC143TS	DTC143TS	DTC143TS	·····
Q507	·····	·····	DTC124ES	DTC124ES
Q508	·····	2SC2458	·····	·····
D301,302,303	1SS133	1SS133	1SS133	·····
D557	·····	·····	HZS9LB3	·····
EF901	·····	·····	·····	CCG1003
FM/AM Tuner Unit	CWE1362	CWE1362	CWE1366	CWE1360
R273	RS1/8S0R0J	RS1/8S0R0J	RS1/8S0R0J	·····
R303	RD1/4PS512JL	RD1/4PS512JL	RD1/4PS512JL	·····
R304	RS1/10S512J	RS1/10S512J	RS1/10S512J	·····
R305	RS1/10S223J	RS1/10S223J	RS1/10S223J	·····
R306	RS1/10S102J	RS1/10S102J	RS1/10S102J	·····
R307	RS1/8S103J	RS1/8S103J	RS1/8S103J	·····
R308	RS1/10S563J	RS1/10S563J	RS1/10S563J	·····
R455	RD1/4PS152JL	RD1/4PS152JL	RD1/4PS152JL	·····
R456	RS1/10S152J	RS1/10S152J	RS1/10S152J	·····
R457,458	RS1/10S472J	RS1/10S472J	RS1/10S472J	·····
R467,468	·····	·····	RS1/16S104J	RS1/16S104J
R477,478	RS1/16S104J	RS1/16S104J	RS1/16S104J	·····
R543	·····	RS1/10S103J	·····	·····
R544	·····	RS1/10S222J	·····	·····
R545	RS1/8S104J	RS1/8S104J	·····	·····
R575	·····	·····	RD1/4PS391JL	·····
R602	·····	·····	·····	RS1/10S222J
R603	RS1/10S222J	·····	RS1/10S222J	·····
R604	·····	RS1/10S222J	RS1/10S222J	·····
R612	·····	·····	RS1/16S223J	RS1/16S223J
R613	·····	·····	RS1/16S104J	RS1/16S104J
R1001	·····	·····	·····	RS1/16S0R0J
R1002	·····	·····	·····	RS1/10S0R0J
R2031	RS1/8S222J	RS1/8S222J	·····	·····
C301,302	CEA4R7M35LL	CEA4R7M35LL	CEA4R7M35LL	·····
C303,304	CKSQYB103K50	CKSQYB103K50	CKSQYB103K50	·····
C305,306	CKSQYB222K50	CKSQYB222K50	CKSQYB222K50	·····
C307,308	CEA4R7M35LL	CEA4R7M35LL	CEA4R7M35LL	·····
C309,316	CKSQYB104K16	CKSQYB104K16	CKSQYB104K16	·····
C310,319	CEA101M10LL	CEA101M10LL	CEA101M10LL	·····
C311,312,318	CEA4R7M35LL	CEA4R7M35LL	CEA4R7M35LL	·····
C314,315	CEA100M16LL	CEA100M16LL	CEA100M16LL	·····
C317	CEA010M50LL	CEA010M50LL	CEA010M50LL	·····
C320	CEA470M10LL	CEA470M10LL	CEA470M10LL	·····
C321	CEA101M10LL	CEA101M10LL	CEA101M10LL	·····
C475,476	·····	·····	CKSRYB102K50	CKSRYB102K50
C487,488	CEA3R3M50LL	CEA3R3M50LL	CEA3R3M50LL	·····
C516	·····	·····	CEAR47M50LL	CEAR47M50LL
C526	·····	·····	·····	CCSRCH101J50
C577	·····	·····	CEA101M10LL	·····
C578	·····	·····	CKSQYB103K25	·····
C2001	·····	·····	·····	CKSQYB473K50
C2011	·····	CCSQCH101K50	·····	·····

Key Board Unit

Circuit Symbol & No.	KEH-P4250/ES KEH-P4200/UC Part No.	KEH-P4110/EE Part No.	KEH-P20/EW Part No.	KEH-P10/EW Part No.
LCD951	CAW1314	CAW1313	CAW1312	CAW1313
D951	MA3062L	MA3056M	MA3062L	MA3056M
IL951,952,953	CEL1341	CEL1295	CEL1341	CEL1295
IL954,955,956	CEL1341	CEL1295	CEL1341	CEL1295

FM/AM Tuner Unit

Circuit Symbol & No.	KEH-P4250/ES KEH-P4200/UC Part No.	KEH-P4110/EE Part No.	KEH-P10/EW KEH-P20/EW Part No.
Q53	·····	·····	2SA1162
D1	1SV251	1SV250	1SV251
D2,3,4	KV1410-F1	KV1460-F6	KV1410-F1
D6,7	RD39JSB3	·····	·····
D158	·····	MA1101-1A	·····
AR1	·····	DSP-201M	DSP-201M
CF51,52,201	CTF1320	CTF1320	CTF1292
L1	LCTBR12K2125	·····	LCTBR12K2125
L2	CTC1108	CTC1112	CTC1108
L3	CTC1105	CTC1121	CTC1105
L4	CTC1108	CTC1122	CTC1108
L5	CTC1107	CTC1111	CTC1107
TC1	·····	·····	CCL1038
R3	RS1/16S223J	RS1/16S0R0J	RS1/16S223J
R5	·····	RS1/16S0R0J	·····
R6	RS1/16S123J	RS1/16S393J	RS1/16S123J
R16	RS1/16S223J	RS1/16S273J	RS1/16S223J
R54	RS1/16S223J	RS1/16S563J	RS1/16S823J
R60	·····	·····	RS1/16S123J
R71	RS1/16S272J	RS1/16S182J	RS1/16S272J
R154	RS1/16S123J	RS1/16S223J	RS1/16S123J
R155	RS1/16S822J	RS1/16S0R0J	RS1/16S822J
R156	RS1/16S822J	RS1/16S103J	RS1/16S822J
R157	RS1/16S562J	RS1/16S822J	RS1/16S562J
R158	RS1/16S682J	·····	RS1/16S682J
R160	RS1/16S473J	RS1/16S273J	RS1/16S273J
R161	RS1/16S103J	RS1/16S822J	RS1/16S822J
R298	RS1/16S225J	·····	·····
R299	RS1/16S225J	·····	·····
C3	CCSRCH470J50	CCSRCH010C50	CCSRCH470J50
C4	CCSRRH270J50	·····	CCSRRH270J50
C5	CCSRRH080D50	·····	·····
C6	CCSRRH040C50	·····	CCSRRH040C50
C10	CCSRRH100D50	CCSRCH050D50	CCSRRH100D50
C12,13	CCSRCH050D50	CCSRCH100D50	CCSRCH050D50
C17	CCSRRH100D50	CCSRCH180J50	CCSRRH100D50
C18	CCSRRH090D50	CCSRCH060C50	CCSRRH090D50
C32	CKSRYB222K50	·····	CKSRYB222K50
C33	·····	CCSRCH040D50	·····
C72	CKSRYB102K50	CCSRCH221J50	CKSRYB102K50
C152,153	CKSRYB333K16	CKSRYB223K25	CKSRYB223K25
C190	CKSRYB223K25	CKSRYB223K25	CKSRYB103K50

PIONEER®
The Art of Entertainment

Service Manual

ORDER NO.
CRZ1629

MULTI-CD CONTROL FM/AM TUNER DECK AMPLIFIER

KEH-P4200 UC
KEH-P4250 ES

MULTI-CD CONTROL FM/MW/LW TUNER DECK AMPLIFIER

KEH-P4110 EE
KEH-P20 EW
KEH-P10 EW

NOTE:

- **See the separate manual CX-197 (CRT1328) for the cassette mechanism description.**
- **The cassette mechanism employed in this model is one of 1M mechanism series.**

CHAPTER 2

CONTENTS

1. PACKING METHOD 2-2
2. CIRCUIT DIAGRAM AND PATTERN
   2.1 TUNER AMP UNIT(KEH-P4200/UC,P4250/ES)..2-5
   2.2 TUNER AMP UNIT(KEH-P4110/EE) 2-10
   2.3 TUNER AMP UNIT(KEH-P20/EW,P10/EW) 2-15
   2.4 CASSETTE MECHANISM ASSY 2-20
   2.5 FM/AM TUNER UNIT (KEH-P4200/UC,P4250/ES) 2-21
   2.6 TUNER UNIT(KEH-P4110/EE).....2-25
   2.7 FM/AM TUNER UNIT(KEH-P20/EW,P10/EW)..2-29
   2.8 KEY BOARD UNIT 2-33
3. CHASSIS EXPLODED VIEW 2-37
4. CASSETTE MECHANISM ASSY EXPLODED VIEW 2-40
5. BLOCK DIAGRAM 2-44

PIONEER ELECTRONIC CORPORATION 4-1, Meguro 1-Chome, Meguro-ku, Tokyo 153, Japan
PIONEER ELECTRONICS SERVICE INC. P.O.Box 1760, Long Beach, California 90801 U.S.A.
PIONEER ELECTRONICS OF CANADA, INC. 300 Allstate Parkway Markham,Ontario L3R OP2 Canada
PIONEER ELECTRONIC [EUROPE] N.V. Haven 1087 Keetberglaan 1, 9120 Melsele,Belgium
PIONEER ELECTRONICS AUSTRALIA PTY.LTD. 178-184 Boundary Road, Braeside, Victoria 3195, Australia TEL:[03]580-9911

© PIONEER ELECTRONIC CORPORATION 1994

K-FFD. NOV. 1994 Printed in Japan

1. PACKING METHOD

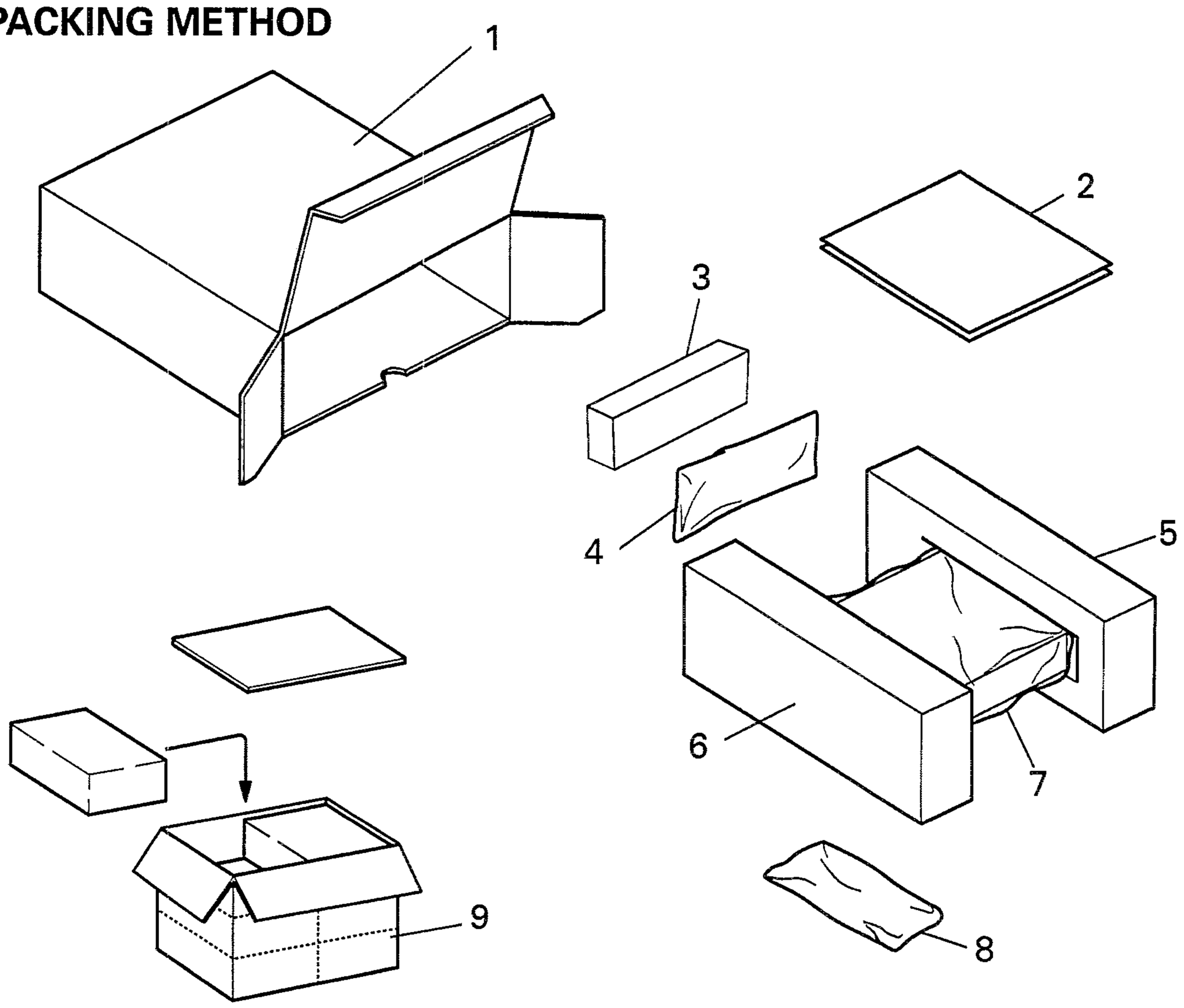

Fig.1

● **Parts List(KEH-P4200/UC)** ✱: Non Spare Part

Mark	No.	Description	Part No.
	1	Carton	CHG2545
	2-1	Owner's Manual	CRD1802
✱	2-2	Card	ARY1048
	3	Case	CNS2269
	4	Cord Assy	CDE4449
	5	Protector	CHP1607
	6	Protector	CHP1606
	7	Polyethylene Bag	CEG1173
	8	Accessory Assy	CEA1918
	9	Contain Box	CHL2545

Owner's Manual

Model	Part No.	Language
KEH-P4200/UC	CRD1802	English, French, Spanish
KEH-P4250/ES	CRD1803	English, French, Spanish, Arabic
KEH-P4110/EE	CRD1879	English, German, Russian, Czechoslovak, Hungarian, Polish

● The KEH-P4250/ES, KEH-P4110/EE, KEH-P20/EW, and KEH-P10/EW Parts Lists enumerate the parts which differ from those enumerated in the KEH-P4200/UC Parts List only. The parts other than those enumerated in the former are identical with those in the latter, to which you are requested to refer, accordingly. The KEH-P4200/UC Parts List is given on page 2-2.

Mark No.	Description	P4200/UC Part No.	P4250/ES Part No.	P4110/EE Part No.	P20/EW Part No.	P10/EW Part No.
1	Carton	CHG2545	CHG2546	CHG2544	CHG2614	CHG2613
2-1	Owner's Manual	CRD1802	CRD1803	CRD1879	·····	·····
✱ 2-2	Card	ARY1048	·····	·····	·····	·····
✱ 2-3	Warranty Card	·····	CRP1137	CRY1071	·····	·····
4	Cord Assy	CDE4449	CDE4448	CDE4448	CDE4448	CDE4448
7	Polyethylene Bag	CEG1173	CEG-162	CEG-162	CEG-162	CEG-162
8	Accessory Assy	CEA1918	CEA2002	CEA1917	CEA1917	CEA1917
9	Contain Box	CHL2545	CHL2546	CHL2544	CHL2614	CHL2613

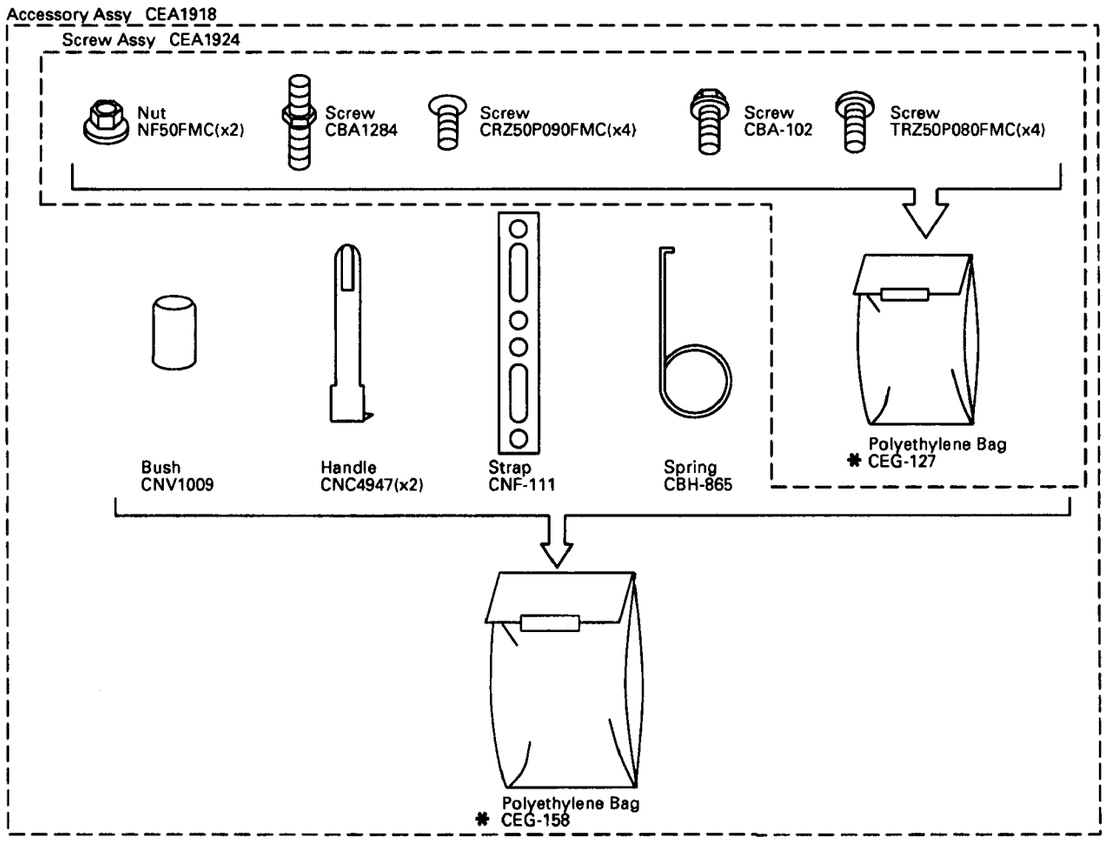

Fig.2

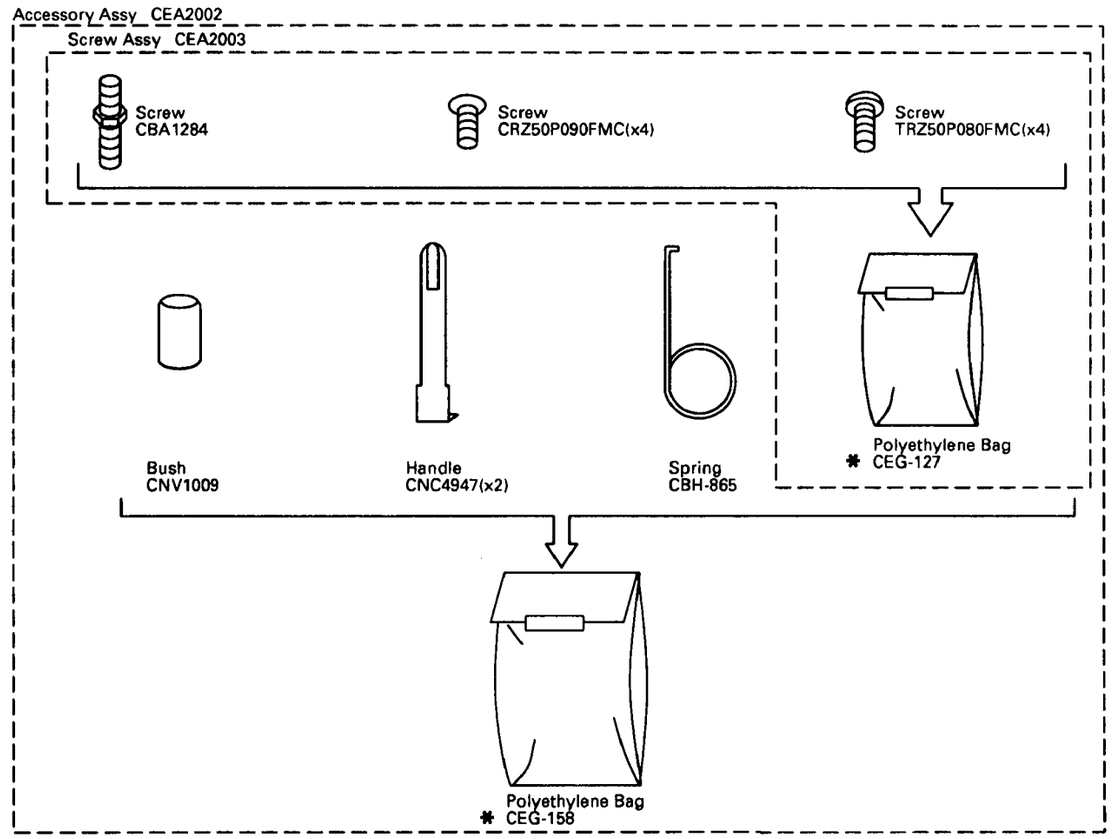

Fig.3

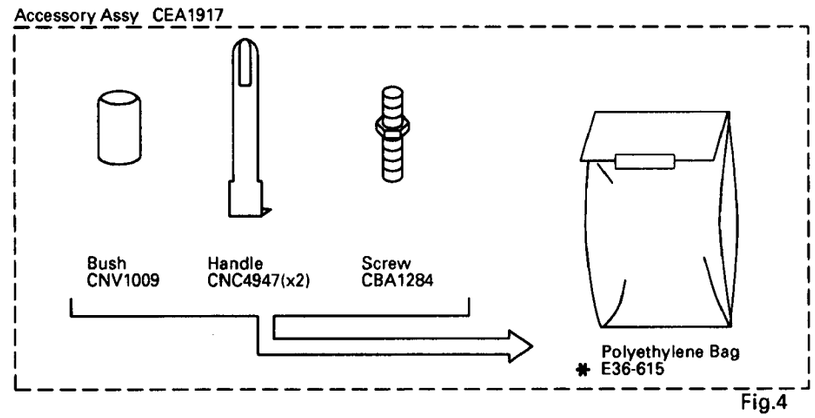

Fig.4

● **Circuit Diagram**

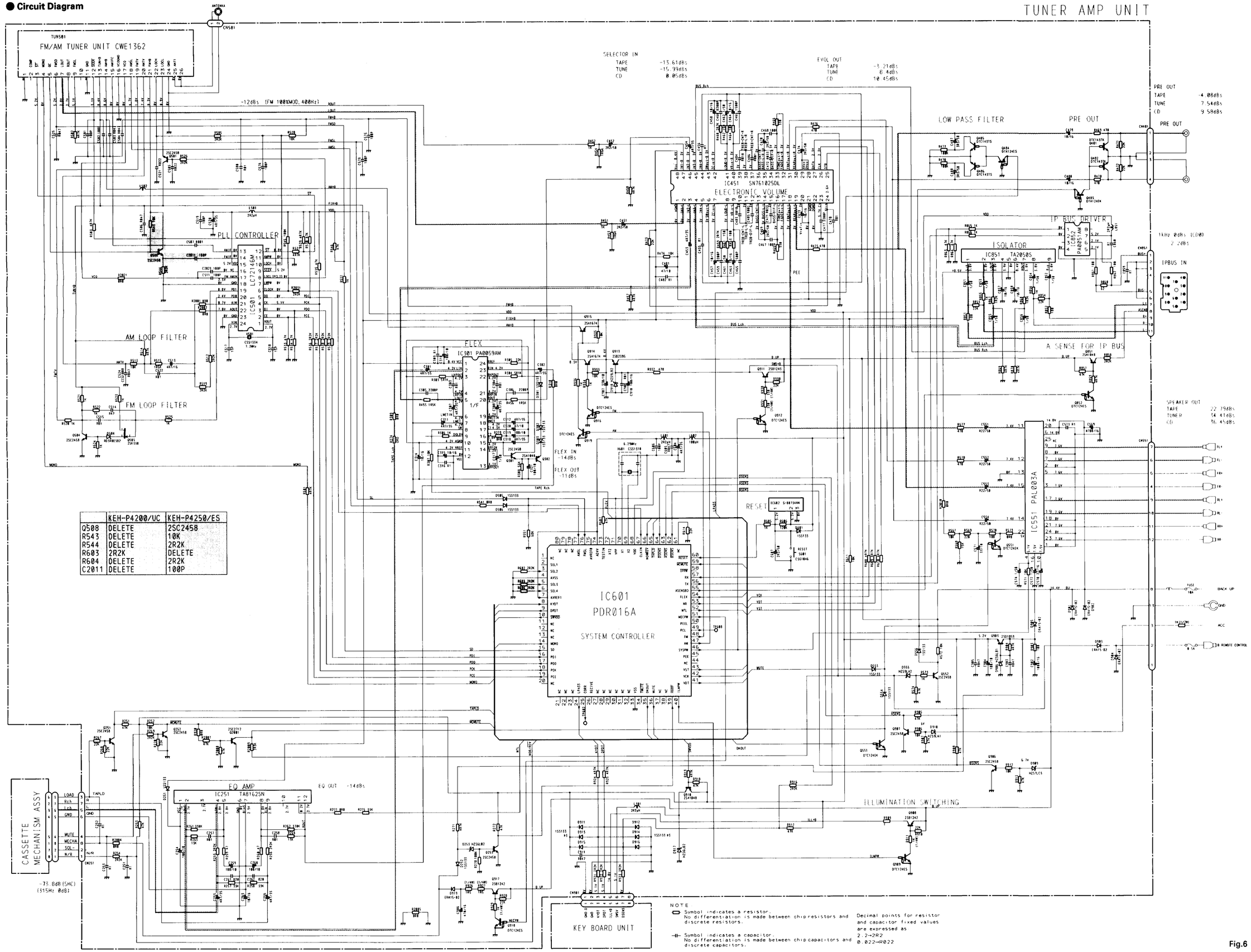

	KEH-P4200/UC	KEH-P4250/ES
Q508	DELETE	2SC2458
R543	DELETE	10K
R544	DELETE	2R2K
R603	2R2K	DELETE
R604	DELETE	2R2K
C2011	DELETE	100P

NOTE

Symbol indicates a resistor.
No differentiation is made between chip resistors and discrete resistors.

Symbol indicates a capacitor.
No differentiation is made between chip capacitors and discrete capacitors.

Decimal points for resistor and capacitor fixed values are expressed as
2.2→2R2
0.022→R022

Fig.6

2.2 TUNER AMP UNIT(KEH-P4110/EE)

● **Circuit Diagram**

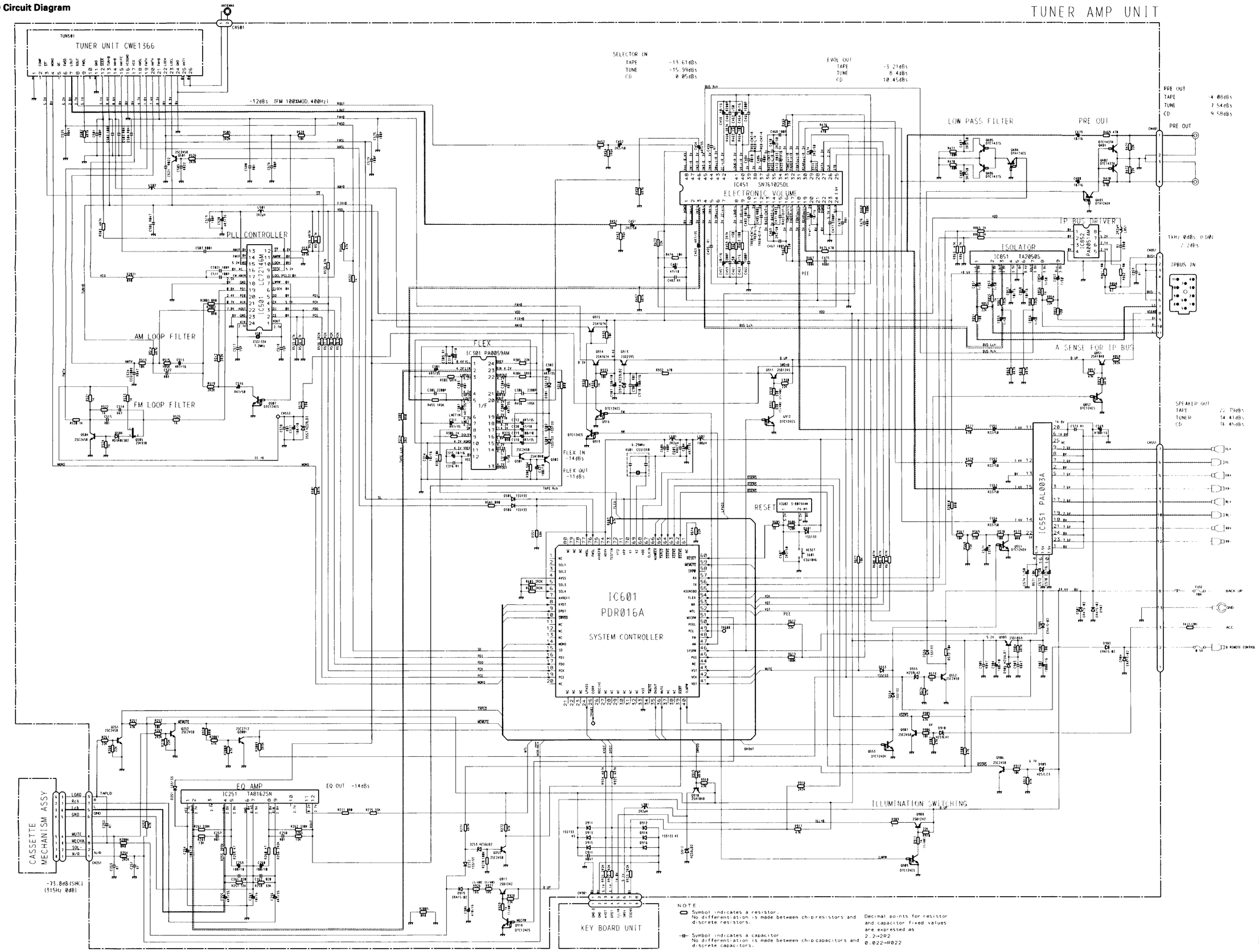

Fig.7

● **Circuit Diagram**

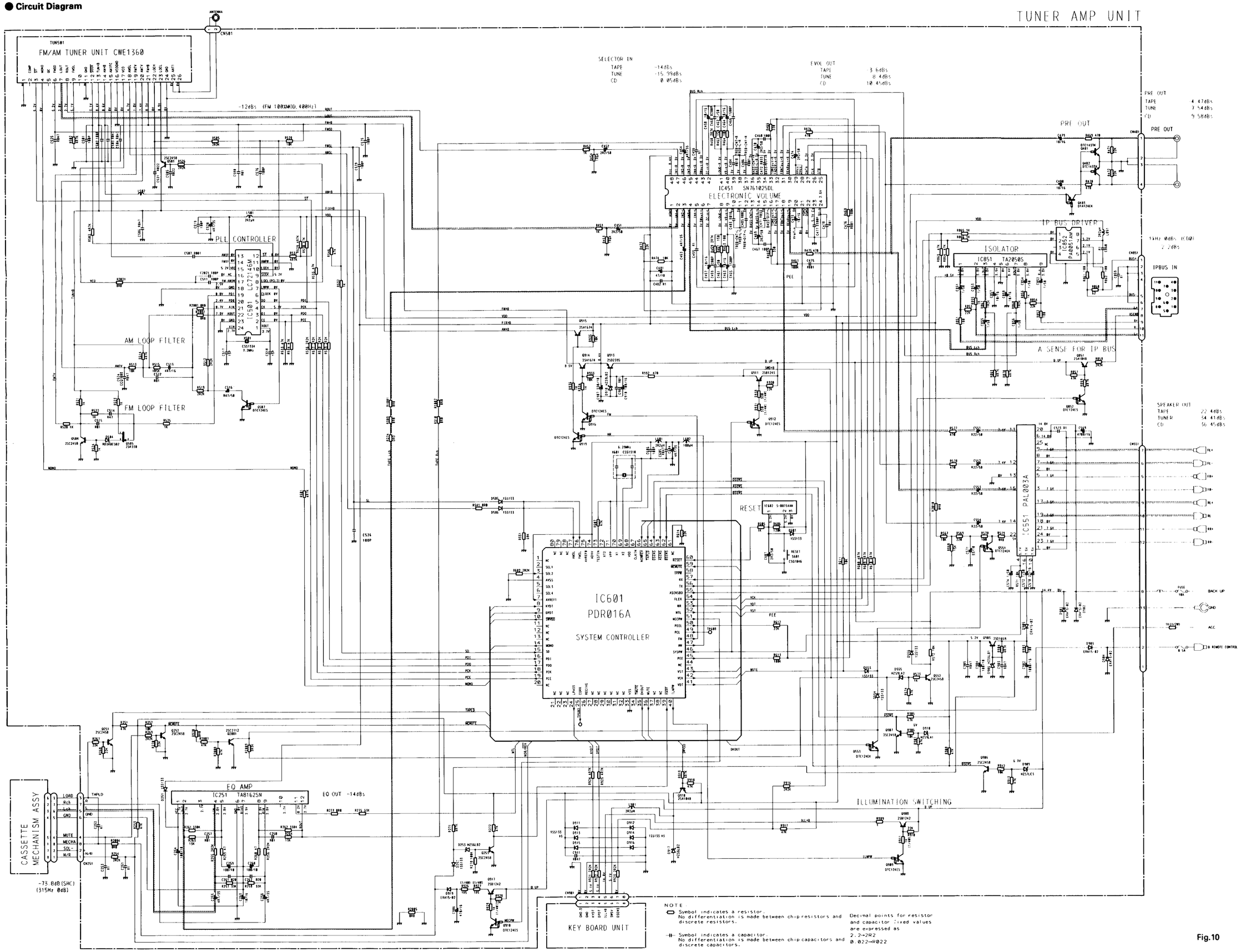

Fig.10

2.4 CASSETTE MECHANISM ASSY

● **Circuit Diagram**

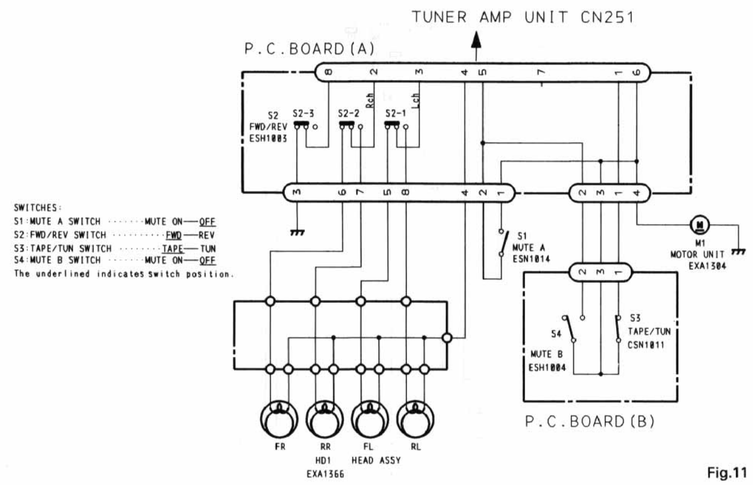

Fig.11

● **Connection Diagram**

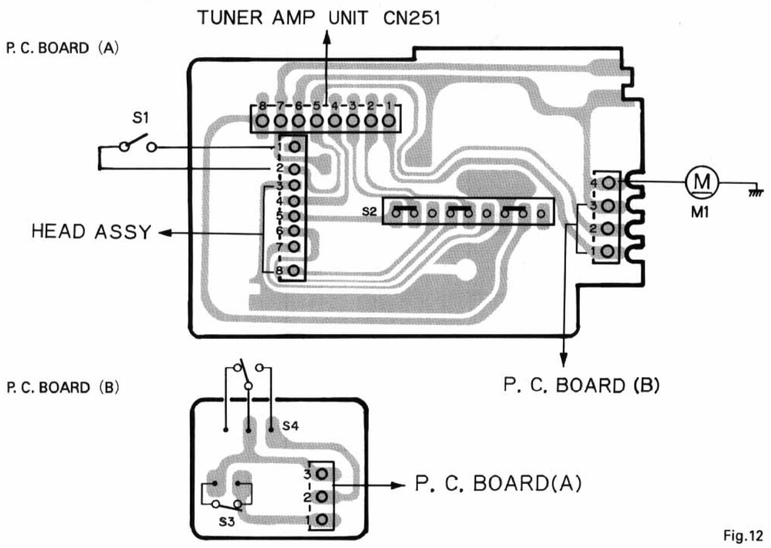

Fig.12

2.5 FM/AM TUNER UNIT(KEH-P4200/UC,P4250/ES)

● **Circuit Diagram**

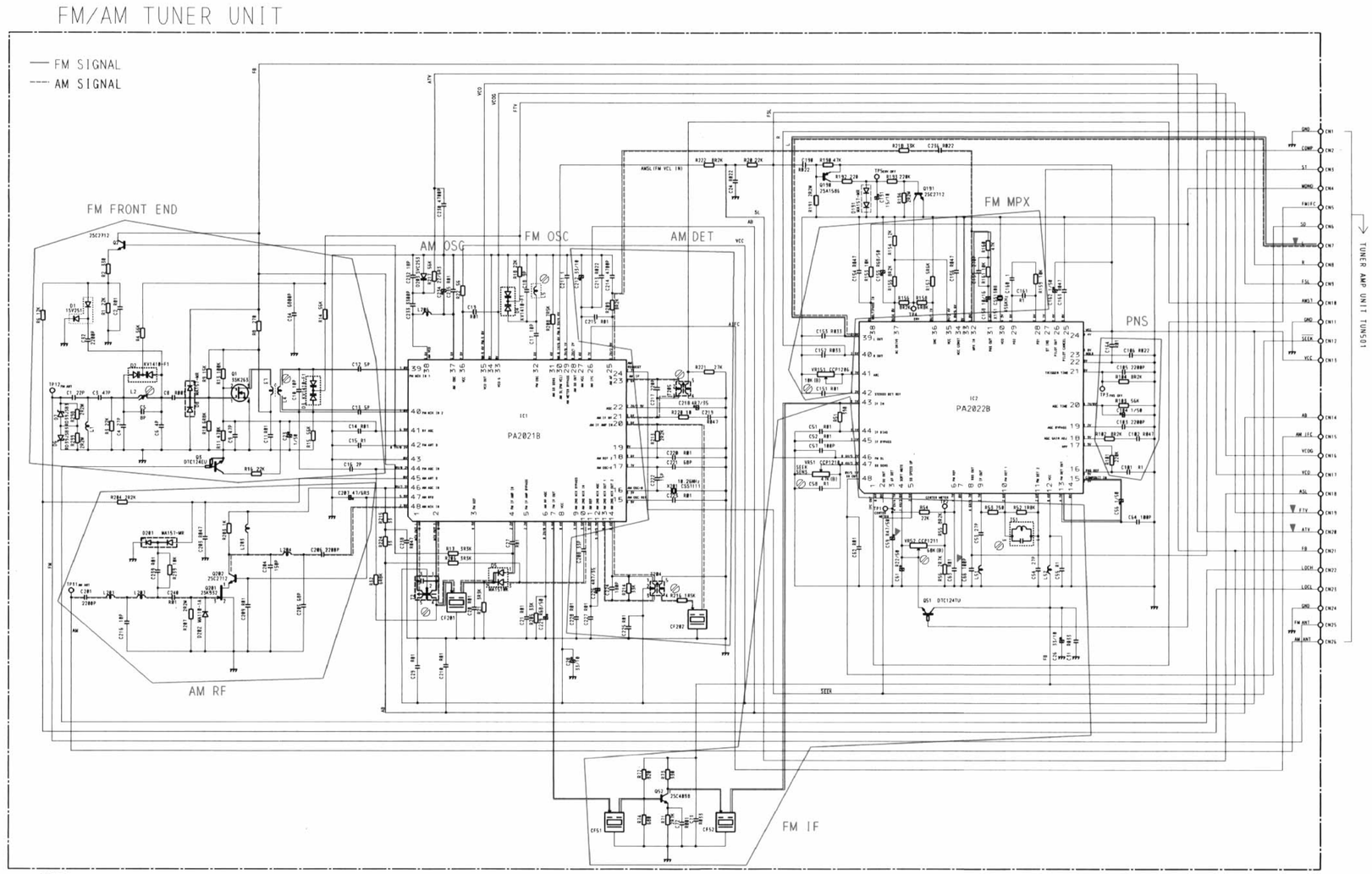

Fig.13

2.6 TUNER UNIT(KEH-P4110/EE)

● Circuit Diagram

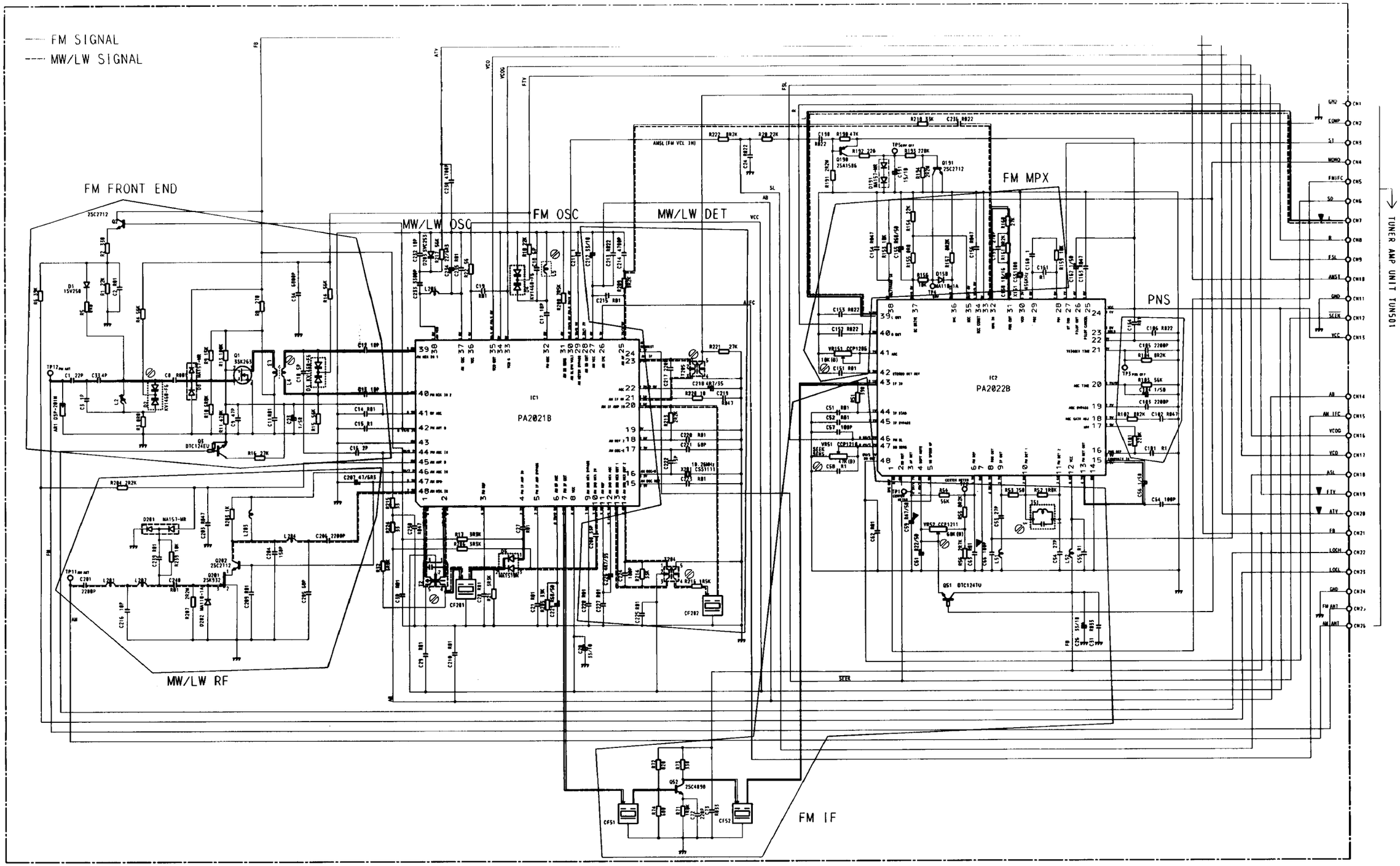

NOTE:

Symbol indicates a resistor.
No differentiation is made between chip resistors and discrete resistors.

Symbol indicates a capacitor.
No differentiation is made between chip capacitors and discrete capacitors.

Decimal points for resistor and capacitor fixed values are expressed as:
2.2→2R2
0.022→R022

Fig.15

2.7 FM/AM TUNER UNIT(KEH-P20/EW,P10/EW)

● Circuit Diagram

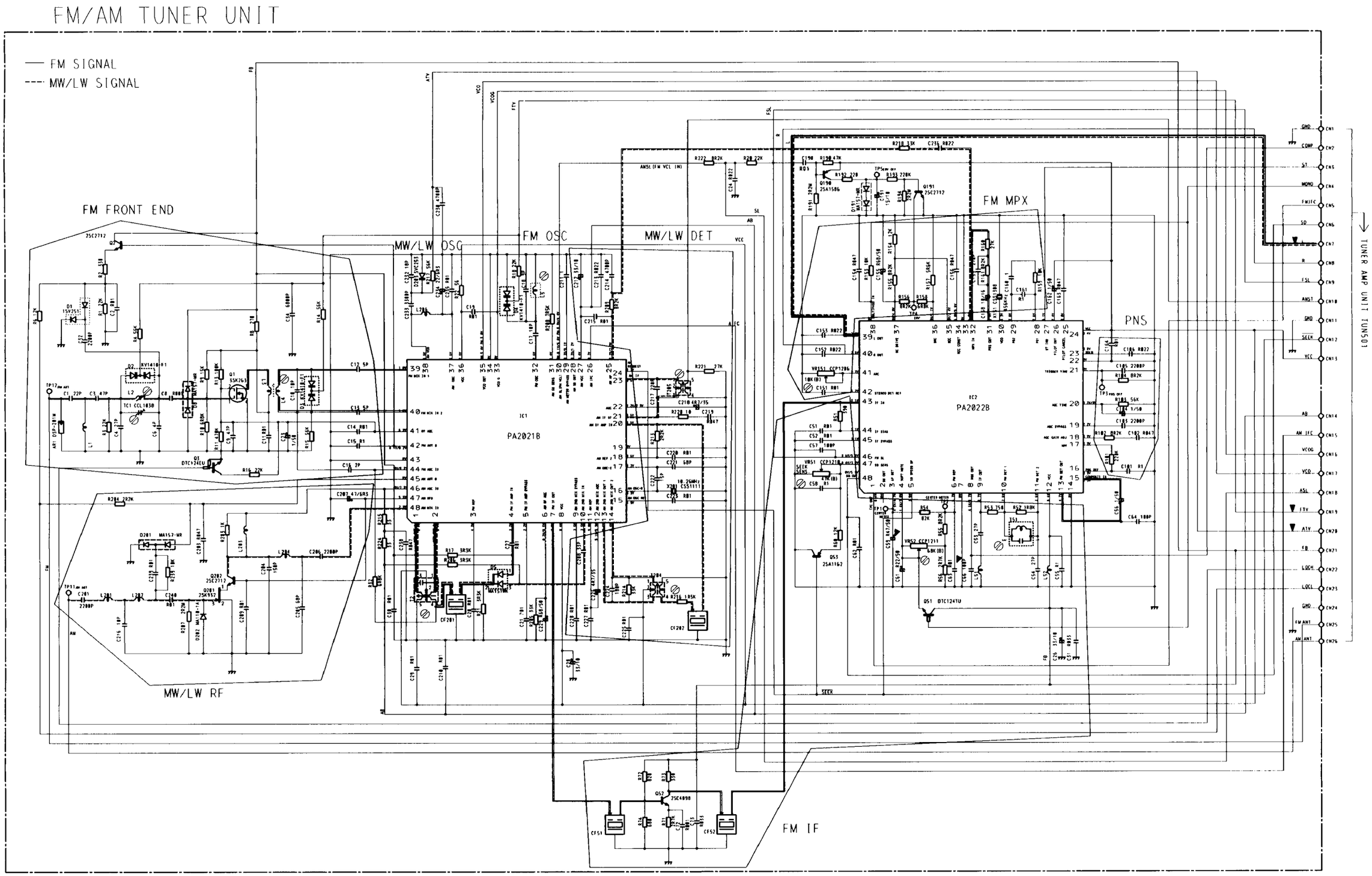

NOTE

Symbol indicates a resistor.
No differentiation is made between chip resistors and discrete resistors.

Symbol indicates a capacitor.
No differentiation is made between chip capacitors and discrete capacitors.

Decimal points for resistor and capacitor fixed values are expressed as:
2.2→2R2
0.022→R022

Fig.17

2.8 KEY BOARD UNIT

● **Circuit Diagram**

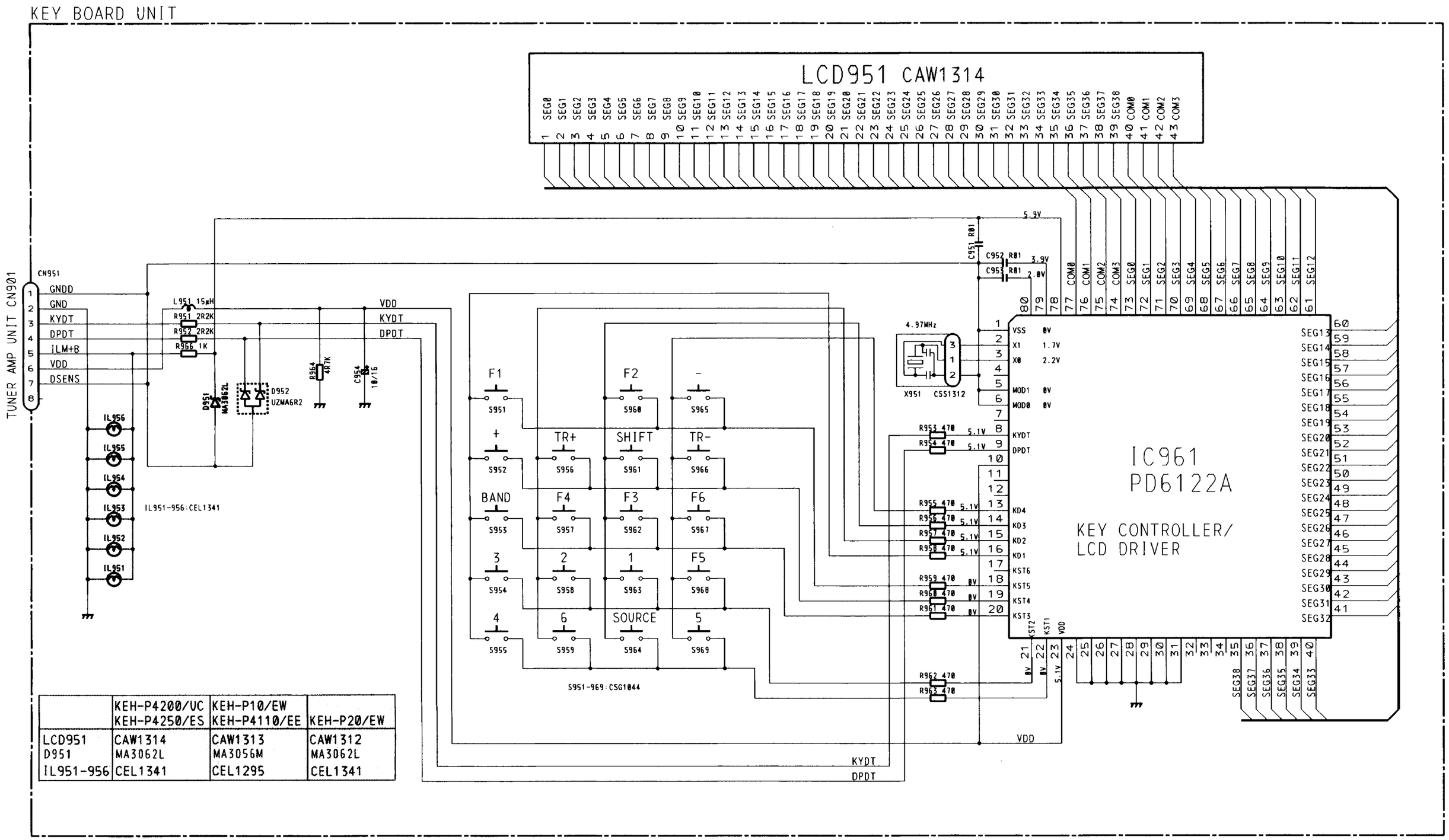

	KEH-P4200/UC KEH-P4250/ES	KEH-P10/EW KEH-P4110/EE	KEH-P20/EW
LCD951	CAW1314	CAW1313	CAW1312
D951	MA3062L	MA3056M	MA3062L
IL951-956	CEL1341	CEL1295	CEL1341

Fig.19

3. CHASSIS EXPLODED VIEW

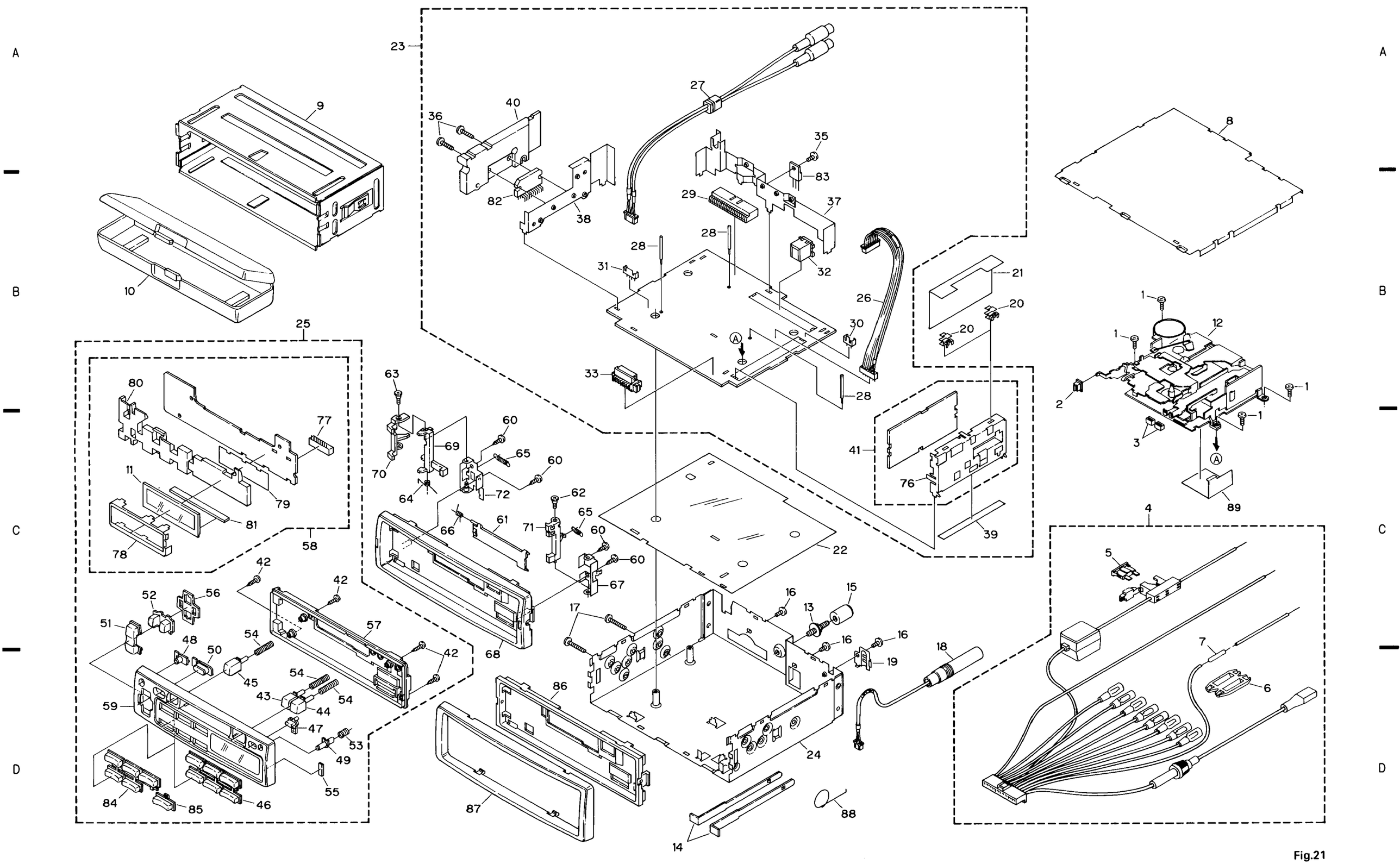

Fig.21

NOTE:

- Parts marked by "*"are generally unavailable because they are not in our Master Spare Parts List.
- **Part List(KEH-P4200/UC)**

Mark No.	Description	Part No.
1	Screw	BSZ26P050FMC
2	Button	CAC2819
3	Button	CAC2820
4	Cord Assy	CDE4449
5	Fuse	CEK1136
6	Cap	CNS1472
7	Resistor	RS1/2P102JL
8	Case	CNB1852
9	Holder	CNC4946
10	Case	CNS2269
11	LCD(LCD951)	CAW1314
12	Cassette Mechanism Assy	EXK1717
13	Screw	CBA1284
14	Handle	CNC4947
15	Bush	CNV1009
16	Screw	BSZ30P060FMC
17	Screw	BSZ30P160FMC
18	Antenna Cable	CDH1115
19	Holder	CNC4963
20	Holder	CNC5704
21	Insulator	CNM3884
22	Insulator	CNM4111
23	Tuner Amp Unit	CWM4061
24	Chassis Unit	CXA7008
25	Detach Grille Assy	CXA6719
26	Connector(CN251)	CDE4446
27	Cord Assy	CDE4456
28	Clamper	CEF1005
29	Plug(CN551)	CKM1140
30	Plug(CN501)	CKS1222
31	Plug(CN481)	CKS1224
32	Connector(CN851)	CKS2486
33	Connector(CN901)	CKS2884
34	•••••	
35	Screw	BSZ30P080FMC
36	Screw	BSZ30P120FMC
37	Holder	CNC5559
38	Holder	CNC5703
39	Insulator	CNM4243
40	Heat Sink	CNR1342
41	FM/AM Tuner Unit	CWE1362
42	Screw	BPZ20P100FZK
43	Button(REW)	CAC4072
44	Button(FF)	CAC4073
45	Button(EJECT)	CAC4074

Mark No.	Description	Part No.
46	•••••	
47	Button(BAND)	CAC4077
48	Button(S)	CAC4078
49	Button(DETACH)	CAC4079
50	Button(SOURCE)	CAC4184
51	Button(+-)	CAC4301
52	Button(<>)	CAC4302
53	Spring	CBH1748
54	Spring	CBH1572
55	Spacer	CNM4341
56	Cushion	CNM4358
57	Cover	CNS3270
58	Key Board Unit	CWM4062
59	Grille Unit	CXA7015
60	Screw	BPZ20P080FMC
61	Door	CAT1640
62	Screw	CBA1215
63	Screw	CBA1271
64	Spring	CBH1566
65	Spring	CBH1567
66	Spring	CBH1655
67	Holder	CNC5694
68	Panel	CNS3106
69	Arm	CNV3654
70	Arm	CNV3655
71	Arm	CNV3750
72	Holder Unit	CXA5779
73	•••••	
74	•••••	
75	•••••	
* 76	Holder	CNC5803
77	Connector(CN951)	CKS2883
78	Holder	CNC5562
79	Reflector	CNM4342
80	Lens	CNV3981
81	Connector	CNV3982
82	IC(IC551)	PAL003A
83	Transistor(Q913)	2SD2395
84	Button	CAC4076
85	Button(F5,F6)	CAC4080
86	Panel	CNS3106
87	Panel	CNS3107
88	Spring	CBH-865
89	Spacer	CNM3842

● The KEH-P4250/ES, KEH-P4110/EE, KEH-P20/EW, and KEH-P10/EW Parts Lists enumerate the parts which differ from those enumerated in the KEH-P4200/UC Parts List only. The parts other than those enumerated in the former are identical with those in the latter, to which you are requested to refer, accordingly. The KEH-P4200/UC Parts List is given on page 2-39.

Mark No.	Description	P4200/UC Part No.	P4250/ES Part No.	P4110/EE Part No.	P20/EW Part No.	P10/EW Part No.
4	Cord Assy	CDE4449	CDE4448	CDE4448	CDE4448	CDE4448
11	LCD(LCD951)	CAW1314	CAW1314	CAW1313	CAW1312	CAW1313
23	Tuner Amp Unit	CWM4061	CWM4064	CWM4058	CWM4085	CWM4085
24	Chassis Unit	CXA7008	CXA7008	CXA7008	CXA7542	CXA7011
25	Detach Grille Assy	CXA6719	CXA6722	CXA6716	CXA6741	CXA6738
41	FM/AM Tuner Unit	CWE1362	CWE1362	CWE1366	CWE1360	CWE1360
43	Button(REW)	CAC4072	CAC4072	CAC3698	CAC4072	CAC3698
44	Button(FF)	CAC4073	CAC4073	CAC3699	CAC4073	CAC3699
45	Button(EJECT)	CAC4074	CAC4074	CAC3700	CAC4074	CAC3876
49	Button(DETACH)	CAC4079	CAC4079	CAC3876	CAC4079	CAC3876
51	Button(+-)	CAC4301	CAC4301	CAC4135	CAC4301	CAC4135
52	Button(<>)	CAC4302	CAC4302	CAC4136	CAC4302	CAC4136
57	Cover	CNS3270	CNS3270	CNS3103	CNS3270	CNS3103
58	Key Board Unit	CWM4062	CWM4065	CWM4059	CWM4077	CWM4073
59	Grille Unit	CXA7015	CXA7016	CXA7014	CXA7021	CXA7020
61	Door	CAT1640	CAT1640	CAT1575	CAT1640	CAT1575
68	Panel	CNS3106	CNS3106	CNS3104	CNS3406	CNS3104
86	Panel	CNS3106	CNS3106	·····	·····	·····
87	Panel	CNS3107	CNS3107	·····	·····	·····
88	Spring	CBH-865	CBH-865	·····	·····	·····

4. CASSETTE MECHANISM ASSY EXPLODED VIEW

● Part List

Mark No.	Description	Part No.
1	Reel Unit	EXA1308
2	Gear Unit	EXA1206
3	Washer	CBF1037
4	·····	
5	Gear	ENV1372
6	Gear	ENV1344
7	Gear	ENV1374
8	Gear	ENV1373
9	Sub Chassis Unit	EXA1300
10	Arm	ENV1375
11	Screw	BMZ20P025FMC
12	Spring	EBH1381
13	·····	
14	·····	
15	Shaft	ELA1266
16	Lever	ENC1275
17	Washer	EBF1015
18	Gear	ENV1342
19	Spring	EBH1462
20	Spring	EBH1362
21	Lever	ENC1302
22	Spring	EBH1359
23	Washer	YE25FUC
24	Spring	EBH1480
25	·····	
26	Lever	ENC1256
27	Spring	EBH1373
28	Arm	ENC1248
29	Spring	EBH1308
30	Washer	YE15FUC
31	Arm Unit	EXA1198
32	Spring	EBH1374
33	Frame	ENC1363
34	Arm	ENC1263
35	·····	
36	Holder	ENC1344
37	Spring	EBH1364
38	Lever	ENV1287
39	Head Base Unit	EXA1271
40	·····	

Mark No.	Description	Part No.
41	Spring	EBH1363
42	Motor Unit	EXA1304
43	Screw	PMS26P025FUC
44	Screw	CBA1054
45	Gathering P.C.Board	ENX1005
46	Switch	ESH1004
47	Switch	ESN1011
48	Screw	CBA1025
49	Gear	ENV1267
50	•••••	
51	•••••	
52	Gear	ENV1343
53	Arm Unit	EXA1302
54	Washer	YE30FUC
55	Spring	EBH1310
56	Flywheel Unit	EXA1257
57	Belt	ENT1018
58	Arm	ENV1408
59	Spring	EBH1317
60	Gear	ENV1409
61	Chassis Unit	EXA1368
62	Screw	JFZ20P025FNI
63	•••••	
64	Pulley	ENV1291
65	•••••	
66	•••••	
67	Plug	CKS1055
68	Gathering P.C.Board	ENX1004
69	Switch	ESH1003
70	Washer	EBE1012

Mark No.	Description	Part No.
71	Screw	BSZ23P050FMC
72	Screw	EBA1028
73	Head Assy	EXA1366
74	P.C.Board	ENP1132
75	Switch	ESN1014
76	Washer	YE20FUC
77	Pinch Roller Unit	EXA1355
78	•••••	
79	•••••	
80	Arm	ENC1213
81	Screw	CBA1038
82	Arm	ENV1426
83	Spring	EBH1368
84	Arm	ENC1340
85	Spring	EBH1481
86	Lever	ENC1244
87	Spring	EBH1481
88	Lever	ENC1245
89	•••••	
90	Pinch Roller Unit	EXA1350
91	•••••	
92	Arm	ENC1305
93	Spring	EBH1367
94	Cord	EDD1010
95	Bracket	ENC1339

● **Cassette mechanism Assy**

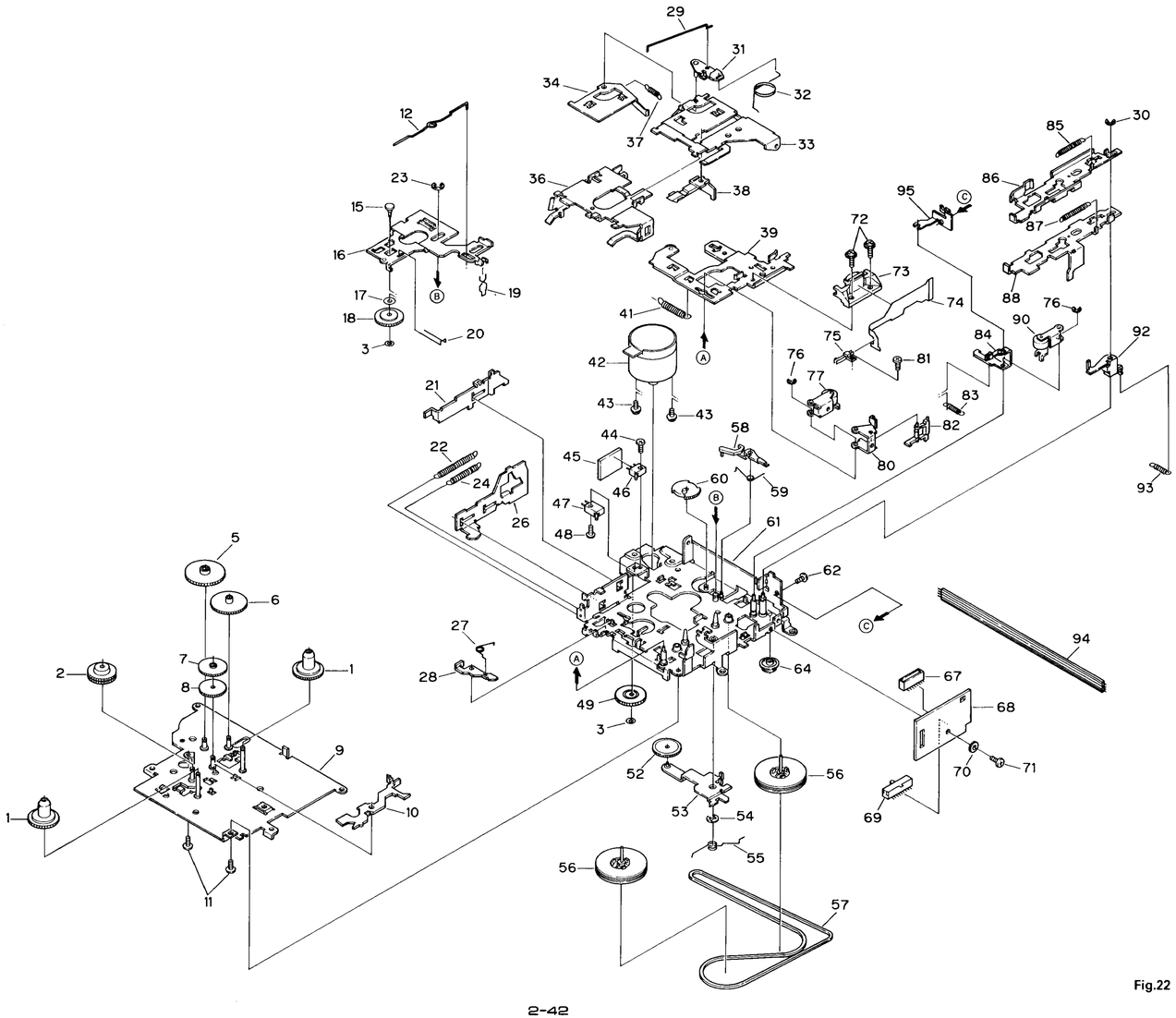

Fig.22

5. BLOCK DIAGRAM

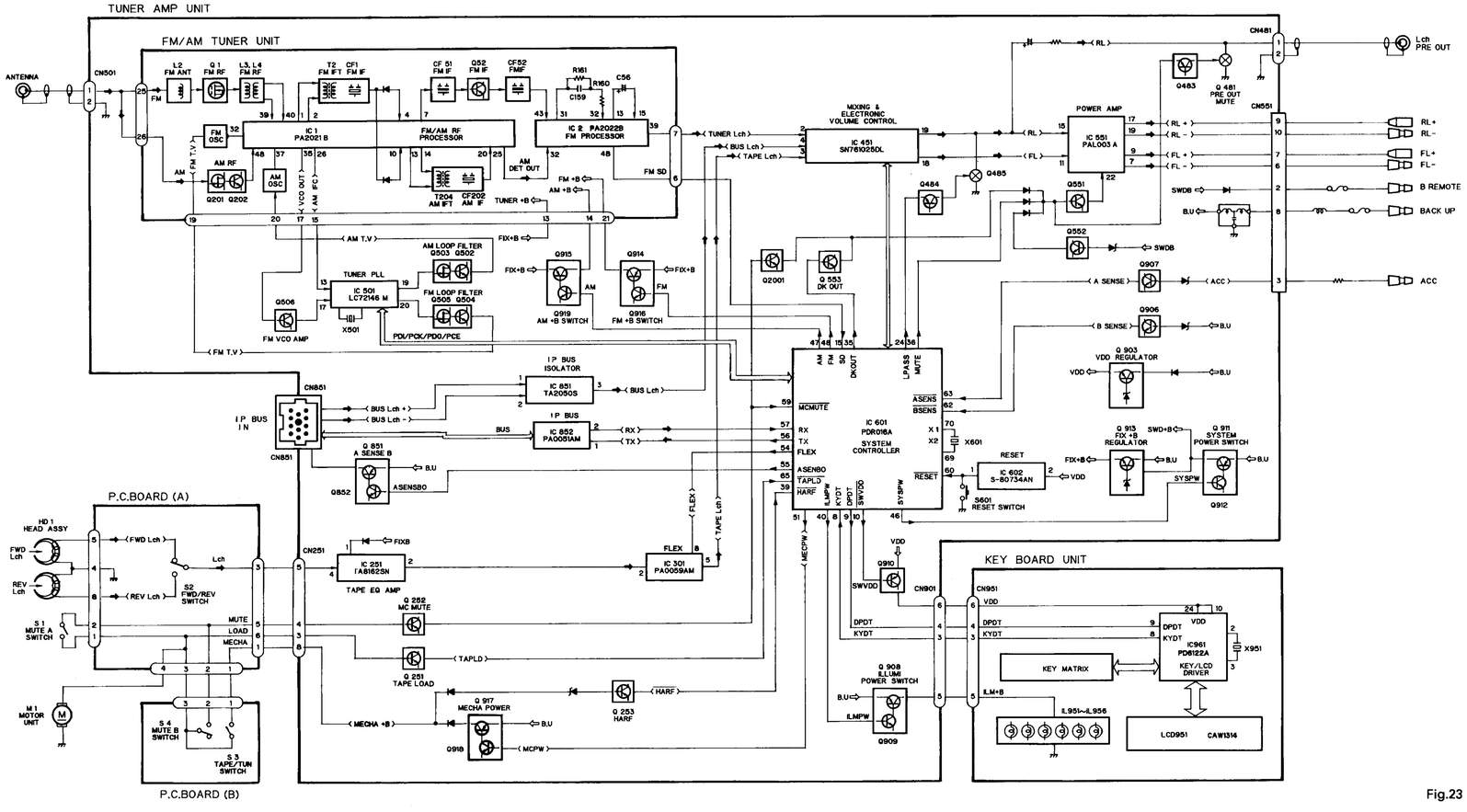

Fig.23

● LCD (CAW1314, CAW1313, CAW1312)

SEGMENT

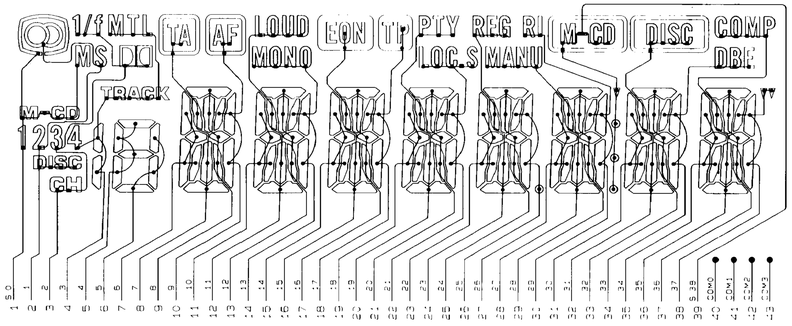

COMMON

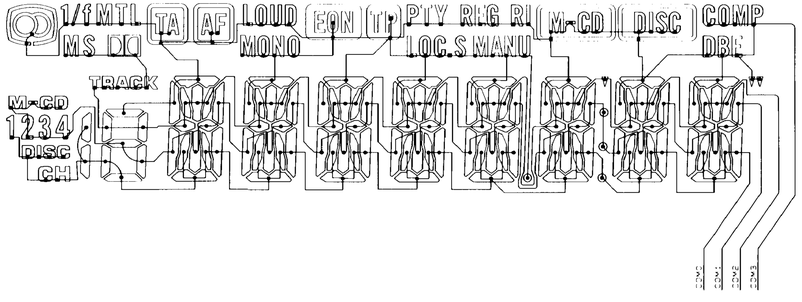

Fig.24